PIER 84 SOUTH

2401 SOUTH COLUMBUS BOULEVARD, PHILADELPHIA, PA 19148

FOR

PHILADELPHIA REGIONAL PORT AUTHORITY

3460 N. DELAWARE AVENUE
PHILADELPHIA, PA 19134

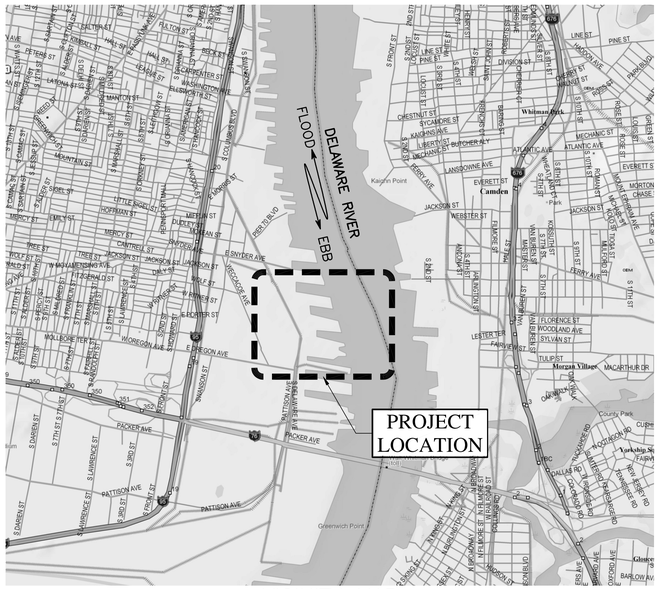

VICINITY MAP

NORTH

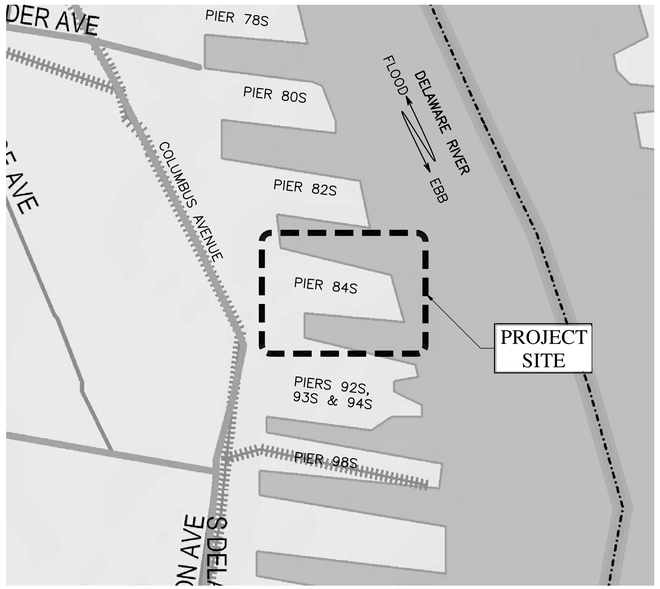

LOCATION MAP

URBAN PROJECT NO. 601300

ISSUED FOR BID
DATE: 09/01/16

REV.	DESCRIPTION	BY	DATE
1	ISSUED FOR BID	MGW	09/01/16

PRPA
PHILADELPHIA,PA
PIER 84 SOUTH

COVER SHEET

URBAN ENGINEERS, INC.
PORTS & WATERWAYS DIVISION
530 WALNUT STREET
PHILADELPHIA, PA. 19106-3685
PHONE (215) 922-8080 FAX (215) 922-8082

DRAWN BY: VKW/PB
DESIGNED BY: MGW/PB
PROJECT NO: 16-126.1
APPROVED BY: MGW

DATE: 11/19/10

SHEET 1 OF 38

CS-1

SEAL
COMMONWEALTH OF PENNSYLVANIA
REGISTERED PROFESSIONAL ENGINEER
Michael G. Wagner
No. PE071324

BY:
DATE:

T:\PROJECTS\On-Going\2006 Projects\601300 PRPA Pier 84S Rehab\Work - 2010\Drawings\FINAL\CS-1 COVER SHEET.dwg

GENERAL NOTES

1. DO NOT SCALE 11x17 SIZE DRAWINGS. DRAWINGS PLOTTED TO 22X34 SIZE MAY BE SCALED, U.N.O.

2. DESIGN AND CONSTRUCTION SHALL COMPLY WITH ALL APPLICABLE STATE AND LOCAL CODES AND STANDARDS, THE PROJECT SPECIFICATIONS AND THESE NOTES. THESE NOTES SHALL TAKE PRECEDENCE OVER PROJECT SPECIFICATIONS. STATE AND LOCAL CODES SHALL TAKE PRECEDENCE OVER PROJECT SPECIFICATIONS AND NOTES.

3. THE CONTRACTOR SHALL FIELD VERIFY ALL DIMENSIONS AND EXISTING CONDITIONS PRIOR TO MOBILIZING. ALL EXISTING & PROPOSED DIMENSIONS AND ELEVATIONS SHOWN ON THE DRAWINGS SHALL BE VERIFIED BY THE CONTRACTOR PRIOR TO ANY FABRICATION AND ERECTION. NOTIFY ENGINEER OF ANY DISCREPANCIES IMMEDIATELY.

4. THE CONTRACTOR SHALL REMOVE FROM THE SITE ANY WASTE MATERIAL AND DEBRIS GENERATED DURING THE COURSE OF THE WORK. DISPOSAL OF ALL GENERATED WASTE MATERIAL AND DEBRIS IS THE CONTRACTORS RESPONSIBILITY, U.N.O.

5. THE CONTRACTOR SHALL PLACE SEDIMENT CONTROL DEVICES, BOOMS, TARPAULINS, FLOATS, STAGING, AND OTHER DEVICES AS NECESSARY TO PREVENT CONSTRUCTION MATERIALS FROM ENTERING THE WATER AND LEAVING THE IMMEDIATE VICINITY OF THE SITE. THE CONTRACTOR SHALL BE RESPONSIBLE FOR CLEANUP OF ALL MATERIALS.

6. THE CONTRACTOR SHALL ABIDE BY ALL APPLICABLE ENVIRONMENTAL PROTECTION STANDARDS, AND FEDERAL, STATE ADN LOCAL CODES, LAWS, REGULATIONS, AND PERMITS.

7. THE CONTRACTOR SHALL CONDUCT HIS OPERATIONS SO AS TO NOT INTERFERE, WITH OR BE DETRIMENTAL TO, VESSEL AND VEHICULAR TRAFFIC DURING THE COURSE OF THE WORK.

8. ALL STRUCTURES ARE DESIGNED TO BE SELF–SUPPORTING AND STABLE AFTER ERECTION IS FULLY COMPLETE. IT IS THE RESPONSIBILITY OF THE CONTRACTOR TO DETERMINE ERECTION PROCEDURES AND SEQUENCE AND TO ENSURE THE SAFETY OF THE STRUCTURE AND ITS COMPONENTS PARTS DURING ERECTION. THIS INCLUDES THE ADDITION OF WHATEVER SHORING, SHEETING, TEMPORARY BRACING, GUYS OR TIE DOWNS WHICH MAY BE NECESSARY. SUCH MATERIAL SHALL REMAIN CONTRACTORS PROPERTY AFTER COMPLETION OF PROJECT.

9. IT IS THE CONTRACTOR'S RESPONSIBILITY TO FOLLOW ALL APPLICABLE SAFETY CODES AND REGULATIONS DURING ALL PHASES OF CONSTRUCTION.

10. ELEVATIONS SHOWN ON DRAWINGS ARE REFERENCED TO LOCAL MLW, U.N.O..

STRUCTURAL AND MISCELLANEOUS STEEL

1. ALL STEEL WORK SHALL BE PERFORMED IN ACCORDANCE WITH THE NJ BUILDING CODE–APPROVED EDITION OF AISC SPECIFICATIONS FOR THE DESIGN, FABRICATION AND ERECTION OF STRUCTURAL STEEL. DESIGN, FABRICATION, AND ERECTION ARE TO BE GOVERNED BY THE LATEST REVISIONS OF:
   A. AISC STEEL CONSTRUCTION MANUAL
   B. AISC CODE OF STANDARD PRACTICE
   C. AWS D1.1 STRUCTURAL WELDING CODE,
   D. RCSC SPECIFICATIONS FOR STRUCTURAL JOINTS USING HIGH STRENGTH BOLTS

2. STRUCTURAL AND MISCELLANEOUS STEEL MATERIALS SHALL CONFORM TO THE FOLLOWING, UNO:

WIDE FLANGE SHAPES:	ASTM A 992, GRADE 50
HP PILES:	ASTM A 572, GRADE 50
PIPE PILES:	ASTM A 252, GRADE 3, Fy = 50 KSI
PIPE:	ASTM A 53, GRADE B, TYPE S
HOLLOW STRUCTURAL SECTIONS (HSS):	ASTM A 500
OTHER SHAPES, BARS AND PLATES:	ASTM A 36, Fy = 36 KSI
HEADED BOLTS:	ASTM A 325
ANCHOR BOLTS:	ASTM A 449
STEEL SHEET PILE (SSP):	ASTM A 572, GRADE 60
NUTS:	ASTM A 563
WASHERS:	ASTM F 436

3. IF OVERSIZED HOLES ARE USED, WASHERS MUST BE EXTRA THICK, AND MAY REQUIRE WELDING.

4. ALL NEW STEEL SHAPES AND PLATES SHALL BE SHOP–COATED WITH AN APPROVED SYSTEM, IN ACCORDANCE WITH THE SPECIFICATIONS, TO RESIST MARINE EXPOSURE, UNO.

5. ALL MISCELLANEOUS METALS INCLUDING BOLTS, WASHERS, NUTS, ANGLES, INSERTS, PLATES, AND OTHER FABRICATIONS SHALL BE HOT–DIP GALVANIZED IN ACCORDANCE WITH THE REQUIREMENTS OF ASTM A 123 AND/OR ASTM A 153, AS APPLICABLE AFTER FABRICATION, UNLESS OTHERWISE NOTED OR SPECIFIED. STAINLESS STEEL ITEMS SHALL NOT BE GALVANIZED.

6. FIELD TREAT DAMAGED GALVANIZED FINISH WITH TWO COATS OF HIGH ZINC DUST OXIDE PAINT, COLD GALVANIZING COMPOUNDS OR APPROVED EQUAL. IN ADDITION, ALL EXPOSED THREADED SURFACES SHALL BE CLEANED AND PAINTED WITH TWO COATS OF HIGH ZINC DUST OXIDE PAINT AFTER INSTALLATION OF THE NUT(S).

7. THE TYPE, SIZE, SPACING, AND ALIGNMENT OF CONNECTING HARDWARE SHOWN ARE CRITICAL AND MUST BE MAINTAINED.

8. ALL WELDING OF STRUCTURAL STEEL SHALL CONFORM TO THE LATEST EDITION OF AWS D.1.1, U.N.O. ALL WELDS SHALL BE MADE WITH E70XX ELECTRODES, UNLESS HIGHER STRENGTH ELECTRODES ARE REQUIRED BY AWS D1.1. ELECTRODES SHALL BE NEW OR BAKED AT THE START OF EACH SHIFT. FOLLOW THE ATMOSPHERIC EXPOSURE LIMITS AND BAKING REQUIREMENTS OF CLAUSE 5 OF AWS D1.1.

9. WELDING PERSONNEL AND PROCEDURES ARE TO BE QUALIFIED PER AWS D1.1, U.N.O.

10. MINIMUM SIZE OF FILLET WELDS SHALL BE 5⁄16" U.N.O.

11. WHEN THE 'ALL–AROUND' WELDING SYMBOL IS USED AT AN END CONNECTION OF A ROLLED SHAPE, THE CONTRACTOR SHALL TERMINATE THE WELD AT EACH OF THE FLANGE EDGES, AND ONE WELD THICKNESS AWAY FROM EACH INTERSECTION OF THE WEB AND FLANGE, U.N.O.

CONCRETE AND REINFORCING STEEL

1. ALL CONCRETE WORK SHALL COMPLY WITH THE RECOMMENDATIONS OF ACI 301 AND ACI 318, UNLESS OTHERWISE SPECIFIED.

2. FOLLOW THE REQUIREMENTS OF ACI 306 WHEN POURING CONCRETE IN COLD WEATHER.

3. CAST–IN–PLACE CONCRETE STRENGTH SHALL BE A MINIMUM OF 5000 PSI AT 28 DAYS, U.N.O.

4. NONMETALLIC NON–SHRINK GROUT STRENGTH SHALL BE A MINIMUM OF 4500 PSI AT 28 DAYS, U.N.O.

5. THE CONTRACTOR SHALL MAINTAIN PROPER CURING PROCEDURES FOR A MINIMUM OF 7 DAYS.

6. ALL DETAILING, FABRICATION AND ERECTION OF REINFORCING STEEL SHALL CONFORM TO THE ACI MANUAL OF STANDARD PRACTICE FOR DETAILING REINFORCED CONCRETE STRUCTURES, ACI 315.

7. REINFORCING STEEL FOR CAST–IN–PLACE CONCRETE SHALL CONFORM TO ASTM A 615, GR 60, EXCEPT REINFORCING STEEL TO BE WELDED SHALL CONFORM TO ASTM A 706.

8. MINIMUM CONCRETE COVER FOR ALL REINFORCING SHALL BE 3 INCHES, U.N.O.

9. ALL CONSTRUCTION JOINTS SHALL BE KEYED, U.N.O. JOINTS SHALL BE PROVIDED AS NECESSARY AT LOCATIONS, AND USING METHODS, APPROVED BY THE ENGINEER. THE CONTRACTOR SHALL A PLAN OF CONSTRUCTION JOINT LOCATIONS, WITH DETAILS, FOR APPROVAL PRIOR TO ORDERING REINFORCEMENT.

10. ALL REINFORCING BAR SPLICES SHALL BE TENSION LAP SPLICES, IN ACCORDANCE WITH ACI 318, U.N.O. SEE TABLE ON THIS SHEET.

11. CHAMFER ALL EXTERNAL EXPOSED CORNERS OF CONCRETE WITH A 1 INCH, 45–DEGREE CHAMFER, U.N.O.

12. WELDING OF REINFORCING STEEL SHALL BE PERFORMED IN ACCORDANCE WITH AWS D1.4.

13. TIMBER DECKING MAY BE USED AS CONCRETE FORMWORK. HOWEVER, ANY AND ALL GAPS, CAUSED BY EITHER DEMOLITION OR DETERIORATION, MUST BE BRIDGED AND SEALED PRIOR TO POURING NEW CONCRETE.

14. ALL DOWELS TO BE INSTALLED INTO EXISTING CONCRETE SHALL BE EPOXIED WITH HILTI HIT–HY 150 MAX SD IN ACCORDANCE WITH THE MANUFACTURER'S RECOMMENDATIONS. HOLES FOR DOWELS SHALL NOT BE MORE THAN 1⁄8" LARGER IN DIAMETER THAN THE DOWELS THEMSELVES.

15. NEW SLABS IN THE VICINITY OF MICROPILES SHALL NOT BE POURED UNTIL THE MICROPILES HAVE BEEN PROOF TESTED, AND THE MICROPILE GROUT HAS REACHED ITS DESIGN STRENGTH.

REBAR TABLE

BAR SIZE	MIN. LAP SPLICE		MIN. DEVELOPMENT LENGTH	
	TOP BAR (INCHES)	OTHER BAR (INCHES)	TOP BAR (INCHES)	OTHER BAR (INCHES)
#4	20	16	16	12
#5	24	18	18	14
#6	29	22	22	17
#7	42	32	32	25
#8	48	37	37	28
#9	60	46	46	35
#10	74	57	57	44
#11	88	68	68	52

DRAWING REFERENCES:

EXISTING SOUNDINGS:
FROM: GBA ENGINEERS, SURVEYORS
DATED: FEBRUARY 10, 2009
DWG. #: 20090210_PIER84S.DWG
TITLED: BATHYMETRIC SURVEY, SINGLE BEAM
VERTICAL DATUM IS REFERENCED TO USACE MEAN LOWER LOW WATER (MLLW), WHICH IS 3.15 FT. BELOW NAVD 88.

3.15' NAVD (NORTH AMERICAN VERTICAL DATUM 1988)

EL. 0.0 (MEAN LOWER LOW WATER)

CIVIL/STRUCTURAL ABBREVIATIONS, U.N.O.

AASHTO	=	AMERICAN ASSOCIATION OF STATE HIGHWAY AND TRANSPORTATION OFFICIALS
ACI	=	AMERICAN CONCRETE INSTITUTE
ACD	=	ADMIRALTY CHART DATUM
AISC	=	AMERICAN INSTITUTE OF STEEL CONSTRUCTION
ALT	=	ALTERNATE
ANSI	=	AMERICAN NATIONAL STANDARDS INSTITUTE
APPROX	=	APPROXIMATE
ASTM	=	AMERICAN SOCIETY FOR TESTING AND MATERIALS
AVG	=	AVERAGE
AWS	=	AMERICAN WELDING SOCIETY
B.O.P.	=	BOTTOM OF PIPE
B/B	=	BACK TO BACK
C/C	=	CENTER TO CENTER
CF	=	CUBIC FEET
C.I.P.	=	CAST IN PLACE
CJ	=	CONSTRUCTION JOINT
CLR	=	CLEAR
CO	=	CLEAN OUT
CONC	=	CONCRETE
CONST	=	CONSTRUCTION
CONT	=	CONTINUOUS
CTE	=	COAL TAR EPOXY
D	=	DEPTH
D/R	=	DOWNRIVER
DEG	=	DEGREES
DETL'S	=	DETAILS
DFM	=	DIESEL FUEL MARINE
DIA	=	DIAMETER
DIST	=	DISTANCE
DOD	=	DEPARTMENT OF DEFENSE
DWT	=	DEAD WEIGHT TONNAGE
E	=	EAST
EA	=	EACH
EF	=	EACH FACE
EHW	=	EXTREME HIGH WATER
EJ	=	EXPANSION JOINT
EL/ELEV.	=	ELEVATION
ELEC	=	ELECTRICAL
ETC	=	ETCETERA
EW	=	EACH WAY
EXIST.	=	EXISTING
EXT	=	EXTERIOR
EXPN	=	EXPANSION
FDN.	=	FOUNDATION
FPS	=	FEET PER SECOND
FRP	=	FIBERGLASS REINFORCED PLASTIC
FS	=	FAR SIDE
FT	=	FEET
FW	=	FRESH WATER
FY	=	YIELD STRESS
GALV	=	GALVANIZED
GR	=	GRADE
GRTNG	=	GRATING
GUSS	=	GUSSET
H	=	HEIGHT
HAT	=	HIGHEST ASTRONOMICAL TIDE
HTL	=	HIGH TIDE LINE
I	=	I BEAM
I/S	=	INSHORE
INV	=	INVERT
JT	=	JOINT
kg	=	KILOGRAMS
KIP	=	KILOPOUND
KN	=	KILONEWTONS
L	=	ANGLE
LAT	=	LOWEST ASTRONOMICAL TIDE OR LATITUDE
LB	=	POUND
LF	=	LINEAR FEET
LG	=	LONG
LLV	=	LONG LEG VERTICAL
LOA	=	LENGTH OVERALL
LONG.	=	LONGITUDE
LT	=	LONG TON
M	=	METERS
mm	=	MILLIMETERS
MAX	=	MAXIMUM
MEA	=	MEASURED
MHHW	=	MEAN HIGHER HIGH WATER
MHW	=	MEAN HIGH WATER
MIN	=	MINIMUM
MISC	=	MISCELLANEOUS
MLLW	=	MEAN LOWER LOW WATER
MLW	=	MEAN LOW WATER
MPa	=	MEGAPASCALS
MPH	=	MILES PER HOUR
MSL	=	MEAN SEA LEVEL
N	=	NEWTON OR NORTH
NAVD–88	=	NORTH AMERICAN VERTICAL DATUM OF 1988
NGVD–29	=	NATIONAL GEODETIC VERTICAL DATUM OF 1929
NTP	=	NOTICE TO PROCEED
NIC	=	NOT IN CONTRACT
NS	=	NEAR SIDE
NTS	=	NOT TO SCALE
NO.	=	NUMBER
O.C.	=	ON CENTER
O/S	=	OUTSHORE
OSHA	=	OCCUPATIONAL SAFETY AND HEALTH ADMINISTRATION
PSI	=	POUNDS PER SQUARE INCH
PVC	=	POLYVINYL CHLORIDE
R/F	=	REINFORCING
R.C.P.	=	REINFORCED CONCRETE PIPE
REQ'D	=	REQUIRED
S	=	SOUTH
SCH	=	SCHEDULE
SECT	=	SECTION
SHT	=	SHEET
SIM	=	SIMILAR
SPEC	=	SPECIFICATION
SQ	=	SQUARE
SS	=	STAINLESS STEEL
STL	=	STEEL
STRUC.	=	STRUCTURE
SUPP	=	SUPPORT
SY	=	SQUARE YARD
T	=	SHORT TON
T.B.D	=	TO BE DETERMINED
TEMP	=	TEMPORARY
THK	=	THICK
THRU	=	THROUGH
T.O.NNE	=	METRIC TON
T.O.	=	TOP OF
T.O.C	=	TOP OF CONCRETE
T.O.S	=	TOP OF STEEL
TYP	=	TYPICAL
UNO	=	UNLESS NOTED OTHERWISE
UHMWPE	=	ULTRA HIGH MOLECULAR WEIGHT POLYETHYLENE
U/R	=	UP RIVER
USACE	=	UNITED STATES ARMY CORPS OF ENGINEERS
W/	=	WITH
W	=	WIDTH, WIDE FLANGE BEAM OR WEST
W.P./WP	=	WORK POINT
W.T.	=	WALL THICKNESS
WT	=	WEIGHT
℄	=	CENTER LINE
#	=	NUMBER
%	=	PERCENT
≦	=	LESS THAN OR EQUAL TO
ℙ	=	PLATE
&	=	AND
@	=	AT
x	=	BY
ϕ	=	DIAMETER
/	=	PER

LEGEND:

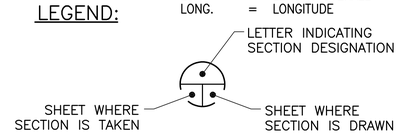

SECTION SYMBOL

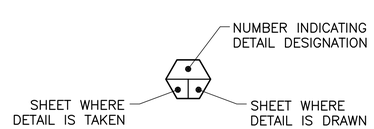

DETAIL SYMBOL

ISSUED FOR BID
DATE: 09/01/16

REV.	DESCRIPTION	BY	DATE
1	ISSUED FOR BID	MGW	09/01/16

PHILADELPHIA,PA
PRPA
PIER 84 SOUTH

GENERAL NOTES

URBAN ENGINEERS, INC.
PORTS & WATERWAYS DIVISION
530 WALNUT STREET
PHILADELPHIA, PA. 19106–3685
PHONE (215) 922–8080 FAX (215) 922–8082

DESIGNED BY: MGW/PB
APPROVED BY: MGW
DRAWN BY: VKW/PB
PROJECT NO: 16–126.1

DATE: 11/19/10

SHEET 2 OF 38

GN–1

SEAL
COMMONWEALTH OF PENNSYLVANIA
REGISTERED PROFESSIONAL
Michael G. Wagner
ENGINEER
No. PE071324

BY:
DATE:

T:\PROJECTS\On–Going\2006 Projects\601300 PRPA Pier 84S Rehab\Work – 2010\Drawings\FINAL\GN–2 GENERAL NOTES 2.dwg

FOUNDATION

1. THE CONTRACTOR SHALL BECOME FAMILIAR WITH THE AVAILABLE SOIL BORING INFORMATION. THE GEOTECHNICAL INVESTIGATION REPORT FOR THIS PROJECT CAN BE OBTAINED FROM THE OWNER.
2. THE CONTRACTOR SHALL NOTIFY THE ENGINEER OF ANY UNUSUAL SOIL CONDITIONS OR FOUNDATION MOVEMENTS IMMEDIATELY.
3. THE CONTRACTOR SHALL TAKE CARE WHEN USING HEAVY EQUIPMENT IN THE VICINITY OF EXCAVATED SLOPES. NO WORK SHALL BE PERFORMED IN THE VICINITY OF SLOPES THAT ARE SATURATED FROM HEAVY RAINS, OR THROUGH WHICH GROUNDWATER IS ACTIVELY DRAINING.
4. THE CONTRACTOR SHALL BE RESPONSIBLE FOR THE DESIGN, INSTALLATION AND FINAL CLEARANCE OF ANY REQUIRED NEEDLING, UNDERPINNING, SHORING, FALSEWORK, FORMWORK, TEMPORARY SUPPORT, AND TEMPORARY BRACING OF EXISTING STRUCTURES.
5. SPUDDING, PRE–AUGERING, AND/OR JETTING OF PILES IS NOT PERMITTED, U.N.O.
6. DO NOT DRIVE, VIBRATE, OR EXTRACT PILES WITHIN 50 FT. OF RECENTLY POURED CONCRETE UNTIL THE CONCRETE HAS BEEN PROPERLY CURED FOR A MINIMUM OF 7 DAYS.
7. EXISTING AND NEW STRUCTURES SHALL NOT BE USED AS FALSEWORK FOR PILE DRIVING, U.N.O.
8. PILES SHALL NOT BE PULLED, JACKED, OR OTHERWISE MANIPULATED INTO POSITION. THE CONTRACTOR SHALL ENSURE THAT ALL PILES ARE INSTALLED IN THE LOCATIONS INDICATED ON THE DRAWINGS. THE CONTRACTOR MUST COORDINATE WITH THE ENGINEER AND ALLOW THE ENGINEER TO MEASURE THE PILE POSITION BEFORE WELDING OR CONNECTING DRIVEN PILES, AT THE ENGINEER'S DISCRETION. THE FINAL HORIZONTAL TOLERANCE ALLOWED AT THE TOP OF THE PILE IS 1" MAXIMUM. IF A PILE IS OUTSIDE OF THIS TOLERANCE AFTER DRIVING AND FALSEWORK REMOVAL, THE CONTRACTOR SHALL IMMEDIATELY NOTIFY THE ENGINEER AND SUBMIT A MODIFIED CONNECTION DETAIL TO THE ENGINEER FOR APPROVAL.
9. THE TOP 80 FT OF ALL NEW STANDARD PILES SHALL BE SHOP COATED WITH COAL–TAR EPOXY AND TOUCHED UP AS NEEDED WITH AN APPROVED FIELD COATING. SEE TECHNICAL SPECIFICATIONS FOR ADDITIONAL DETAILS.

TIMBER

1. SHIMS: CLEAR SELECT STRUCTURAL WHITE OAK HEARTWOOD, EDGE SAWN (I.E. GRAIN TO BE ROUGHLY PERPENDICULAR TO THE BEARING FACES OF THE SHIM), U.N.O.
2. OTHER TIMBER: SELECT STRUCTURAL MARINE GRADE SOUTHERN PINE THAT IS ROUGH CUT, U.N.O.
3. LEAD HOLES FOR LAG SCREW SHALL BE BORED AS FOLLOWS:
   A. THE CLEARANCE HOLE FOR THE SHANK SHALL HAVE THE SAME DIAMETER AS THE SHANK, AND THE SAME DEPTH OF PENETRATION AS THE LENGTH OF UNTHREADED SHANK. THE DRILL BIT LENGTH SHALL BE ⅛" LESS IN LENGTH AS IS REQUIRED TO ACCOMMODATE SHANK DEPTH.
   B. THE LEAD HOLE FOR THE THREADED PORTION SHALL HAVE A DIAMETER EQUAL TO 70% OF THE SHANK DIAMETER.
   C. THIS EQUIPMENT SHALL BE EXPOSED TO THE FIELD ENGINEER FOR REVIEW PRIOR TO DAILY USE.
4. THE THREADED PORTION OF THE LAG SCREW SHALL BE INSERTED IN ITS LEAD HOLE BY TURNING WITH A WRENCH OR BY ROTATING EQUIPMENT, NOT BY DRIVING WITH A HAMMER.
5. SOAP OR OTHER LUBRICANT SHALL BE USED ON THE LAG SCREWS OR IN THE LEAD HOLES TO FACILITATE INSERTION AND PREVENT DAMAGE TO THE LAG SCREW.
6. ANY TIMBER KEYS DAMAGED OR DESTROYED DURING DEMOLITION SHALL BE REPLACED AT NO COST TO THE OWNER,

DESIGN VESSELS

1. LOA = 563 FT
   BEAM = 88.6 FT
   DESIGN DISPLACEMENT = 32,000 TONNES
   DESIGN DRAFT = 28 FT

DESIGN LOADS

1. BERTHING FORCES BASED ON THE FOLLOWING CRITERIA:
   VESSEL DWT: 32,000 METRIC TONS
   APPROACH VELOCITY = 0.5 FT./SEC.
2. MOORING LOADS BASED ON THE FOLLOWING CRITERIA:
   LOA = 563 FT.
   BEAM = 88.6 FT.
   DESIGN DRAFT = 28 FT.
   TRANSVERSE WIND SAIL AREA = 18,000 SQ. FT.
   LONGITUDINAL WIND SAIL AREA = 3,000 SQ. FT.
   SUSTAINED WIND SPEED = 50 MPH.
   CURRENT VELOCITY = 2 KNOTS
3. LIVE LOAD = 800 PSF, OR HS20 TRUCK LOADING, 1st FLOOR OF WAREHOUSE
   500 PSF, UPRIVER APRON,
   250 PSF, OUTSHORE APRON

PILE TESTING & DRIVE CRITERIA

1. STANDARD PILES SHALL BE DRIVEN TO ACHIEVE THE FOLLOWING ALLOWABLE CAPACITIES:
   1.1. 12.75"ø x 0.5" PLUMB PILES ON THE NORTH APRON SHALL BE DRIVEN TO ACHIEVE A 100 TON ALLOWABLE CAPACITY IN COMPRESSION.
   1.2. 16"ø x 0.5" PLUMB PILES SHALL BE DRIVEN TO ACHIEVE A 110 TON ALLOWABLE BEARING CAPACITY IN COMPRESSION.
   1.3. 16"ø x 0.5" TYPE "U" PLUMB PILES SHALL BE DRIVEN TO ACHIEVE A 75 TON ALLOWABLE BEARING CAPACITY IN COMPRESSION, AND A 65 TON ALLOWABLE CAPACITY IN UPLIFT.
   1.4. 16"ø x 0.75" BATTER PILES SHALL BE DRIVEN TO ACHIEVE A 155 TON ALLOWABLE BEARING CAPACITY IN COMPRESSION.
   1.5. THE MINIMUM FACTORS OF SAFETY ON THESE ALLOWABLE CAPACITIES SHALL BE 2.25 ON COMPRESSION, AND 3.0 ON UPLIFT.

2. MICROPILES SHALL BE DRIVEN TO ACHIEVE THE FOLLOWING ALLOWABLE CAPACITIES:
   2.1. TYPE "H" MICROPILES SHALL BE DRIVEN TO ACHIEVE A 60 TON ALLOWABLE BEARING CAPACITY IN COMPRESSION.
   2.2. TYPE "L" MICROPILES SHALL BE DRIVEN TO ACHIEVE A 90 TON ALLOWABLE BEARING CAPACITY IN COMPRESSION.
   2.3. VERIFICATION TESTS SHALL BE PERFORMED BEFORE THE START OF PRODUCTION MICROPILE INSTALLATION TO VERIFY THAT THE CONTRACTOR–DESIGNED MICROPILES CAN ACHIEVE THE REQUIRED ALLOWABLE CAPACITIES.
      2.3.1. ONE VERIFICATION TEST SHALL BE PERFORMED FOR TYPE "L" MICROPILES, OUTSIDE OF THE MUD FENCE IN THE NORTHEAST CORNER OF THE PIER.
      2.3.2. ONE VERIFICATION TEST SHALL BE PERFORMED FOR TYPE "H" MICROPILES, INSIDE OF THE MUDFENCE.
      2.3.3. DURING VERIFICATION TESTING, THE MICROPILE SHALL BE LOAD TESTED TO 2.0 x THE ALLOWABLE DESIGN LOADS LISTED ABOVE.
         2.3.3.1. VERIFICATION TESTING SHALL BE CONDUCTED FOR LOADS IN COMPRESSION.
      2.3.4. VERIFICATION MICROPILES PILES SHALL BE CONSIDERED SACRIFICIAL, AND SHALL NOT BE USED AS PRODUCTION MICROPILES. VERIFICATION TESTS SHALL BE PERFORMED BEFORE THE START OF PRODUCTION MICROPILE INSTALLATION TO VERIFY THAT THE CONTRACTOR–DESIGNED MICROPILES CAN ACHIEVE THE REQUIRED ALLOWABLE CAPACITIES.
   2.4. PROOF TESTS SHALL BE PERFORMED THROUGHOUT PRODUCTION MICROPILE INSTALLATION TO CONFIRM THAT THE PRODUCTION CONSTRUCTION PROCEDURES ARE ACHIEVING THE REQUIRED ALLOWABLE CAPACITIES.
      2.4.1. FOUR (4) PROOF TESTS SHALL BE PERFORMED FOR TYPE "L" MICROPILES, IN BOTH THE NORTHEAST AND SOUTHEAST CORNERS OF THE PIER.
      2.4.2. FIFTEEN (15) PROOF TESTS SHALL BE PERFORMED FOR TYPE "H" MICROPILES, BOTH INSIDE AND OUTSIDE OF THE MUDFENCE.
      2.4.3. DURING PROOF TESTING, THE MICROPILE SHALL BE LOAD TESTED TO 1.6 x THE ALLOWABLE DESIGN LOADS LISTED ABOVE.
         2.4.3.1. THE MICROPILE CONTRACTOR MAY SEEK APPROVAL FROM THE ENGINEER TO CONDUCT PROOF TESTS FOR LOADS IN TENSION, PROVIDED THE DATA CAN BE CORRELATED WITH THE PRE–PRODUCTION VERIFICATION TESTS.
   2.5. THE MICROPILE CONTRACTOR SHALL SUBMIT A TESTING PLAN, INCLUDING THE LOCATIONS OF TEST MICROPILES, TEST METHODS, AND CALCULATIONS SHOWING THE STRUCTURAL ADEQUACY OF THE TEST MICROPILES TO RESIST THE TEST LOADS.
   2.6. THE APPROVED MICROPILE CONTRACTOR SHALL BE SOLELY RESPONSIBLE FOR THE DESIGN, TESTING AND INSTALLATION OF MICROPILES TO ACHIEVE THE CAPACITIES LISTED ABOVE. SEE THE TECHNICAL SPECIFICATIONS FOR FURTHER DETAILS OF MICROPILE DESIGN, TEST AND SUBMITTAL REQUIREMENTS, SEE SECTION 02463 OF THE TECHNICAL SPECIFICATIONS.

3. THE CONTRACTOR SHALL PERFORM AND SUBMIT THE RESULTS OF DRIVEABILITY ANALYSES BASED ON BORING B–1 OF THE GEOTECH REPORT TO DETERMINE THE SPECIFICATIONS OF THE HAMMER TO BE USED FOR DRIVING STANDARD PILES TO THE REQUIRED ALLOWABLE CAPACITIES. THIS HAMMER SHALL BE REVIEWED BY THE ENGINEER PRIOR TO USE.

4. THE CONTRACTOR SHALL PERFORM AND SUBMIT THE RESULTS OF DYNAMIC TESTING AND CAPWAP ANALYSES OF THE TEST PILES INDICATED ON DWGS. P–1 – P–3. THE DYNAMIC TESTING SHALL INCLUDE PDA MONITORING DURING INITIAL DRIVE, AND A RESTRIKE TO BE PERFORMED AFTER A MINIMUM OF 48 HOURS.
   4.1. TEST PILES SHALL BE DRIVEN AND TESTED FOR THEIR FULL LENGTHS.
   4.2. THIS TESTING SHALL INFORM THE DEVELOPMENT OF DRIVE CRITERIA TO ACHIEVE THE SPECIFIED ALLOWABLE PILE CAPACITIES IN COMPRESSION AND UPLIFT. THE ENGINEER SHALL ISSUE DRIVE CRITERIA BASED ON THE RESULTS FROM THE TEST PILES, WHICH SHALL GOVERN THE DRIVING OF PRODUCTION PILES.
   4.3. PRODUCTION PILES OF EACH TYPE SHALL NOT BE DRIVEN UNTIL THAT TYPE HAS BEEN TESTED AND THE ENGINEER HAS ISSUED DRIVE CRITERIA FOR THAT TYPE.

5. SEE THE TECHNICAL SPECIFICATIONS FOR FURTHER DETAILS ON PILE TESTING REQUIREMENTS.

LEGEND:

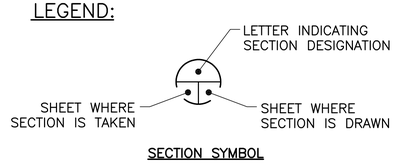

SECTION SYMBOL

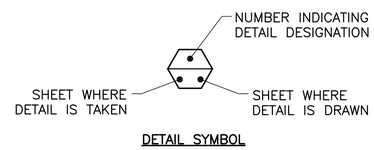

DETAIL SYMBOL

DUST CONTROL:

1. THE CONTRACTOR SHALL ERECT A TEMPORARY WALL IN THE FIRST FLOOR OF THE WAREHOUSE THAT SHALL REMAIN IN PLACE THROUGHOUT THE DURATION OF CONSTRUCTION ACTIVITIES. THE WALL SHALL ENCLOSE THE WORK AREA AND PREVENT DUST, DIRT, AND DEBRIS GENERATED DURING CONSTRUCTION FROM ENTERING THE REST OF THE WAREHOUSE.
2. SEE DWG. GA–4 FOR AN APPROXIMATE LOCATION OF THE TEMPORARY WALL.
3. THE DESIGN, ERECTION, MAINTENANCE, AND EVENTUAL DEMOLITION OF THIS TEMPORARY WALL SHALL BE THE SOLE RESPONSIBILITY OF THE CONTRACTOR.

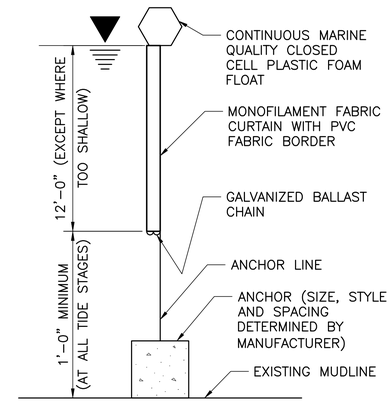

TURBIDITY CURTAIN DETAIL
N.T.S.

EROSION & SEDIMENT CONTROL NOTES:

1. A FLOATING TURBIDITY CURTAIN SHALL BE PLACED TO ENCOMPASS AREAS WHERE SEDIMENT MAY BE GENERATED AS A RESULT OF PROJECT WORK. A TURBIDITY CURTAIN MUST BE IN PLACE FOR ACTIVITIES THAT MAY GENERATE TURBIDITY, INCLUDING: PILE INSTALLATION OR EXTRACTION, PLACING CONCRETE UNDERWATER, DREDGING OR UNDERWATER DEBRIS REMOVAL, AND DEMOLITION.
2. THE CURTAIN HEIGHT SHALL NOT EXCEED 12 FT, AND SHALL BE SHORT ENOUGH TO MAINTAIN A 1 FT GAP BETWEEN ITS BOTTOM AND THE MUDLINE AT MEAN LOW WATER.
3. UNLESS NOTED OTHERWISE, THE TURBIDITY CURTAIN SHALL BE A TRITON TYPE III PERMABLE SILT AND TRUBIDITY BARRIER, OR APPROVED EQUIVALENT. WHERE NO TIDAL FLUCTUATION OR CURRENT EXISTS, A TYPE II BARRIER MAY BE USED. SUBMIT PROPOSED BARRIER SPECIFICATIONS, ALONG WITH THE MANUFACTURER'S RECOMMENDED CONDITIONS FOR USE.
4. 8"ø EROSION CONTROL SEDIMENT LOGS SHALL BE PLACED ALONG THE WATER'S EDGE IN ALL AREAS WHERE SEDIMENT OR RUNOFF MAY ENTER THE WATER, THROUGHOUT THE DURATION OF THE PROJECT, TO PREVENT THE DISCHARGE OF SEDIMENTS INTO THE WATER.
5. ATTACH BUOYS WITH NAVIGATION LIGHTS WHERE REQUIRED BY THE COAST GUARD.

PILE COATINGS

1. THE TOP 80 FT OF ALL NEW STANDARD PILES SHALL BE SHOP COATED WITH COAL–TAR EPOXY AND TOUCHED UP AS NEEDED WITH AN APPROVED FIELD COATING. SEE TECHNICAL SPECIFICATIONS FOR ADDITIONAL DETAILS.
2. MICROPILE COMPONENTS SHALL BE DESIGNED BY THE MICROPILE CONTRACTOR TO ACHIEVE A DESIGN LIFE OF 50 YEARS. THIS SHALL BE ACHIEVED EITHER THROUGH A COAL TAR EPOXY COATING SYSTEM ON THE STEEL CASING, AND WHATEVER FURTHER COATING SYSTEM IS PROPOSED BY THE MICROPILE CONTRACTOR.

ISSUED FOR BID
DATE: 09/01/16

REV.	DESCRIPTION	BY	DATE
1	ISSUED FOR BID	MGW	09/01/16

PRPA
PHILADELPHIA,PA
PIER 84 SOUTH
GENERAL NOTES 2

URBAN ENGINEERS, INC.
PORTS & WATERWAYS DIVISION
530 WALNUT STREET
PHILADELPHIA, PA. 19106–3685
PHONE (215) 922–8080 FAX (215) 922–8082

DESIGNED BY: MGW/PB
APPROVED BY: MGW
DRAWN BY: VKW/PB
PROJECT NO: 16–126.1

DATE: 11/19/10
SHEET 3 OF 38
GN-2

SEAL
COMMONWEALTH OF PENNSYLVANIA
REGISTERED PROFESSIONAL
Michael G. Wagner
ENGINEER
No. PE071324
BY:
DATE:

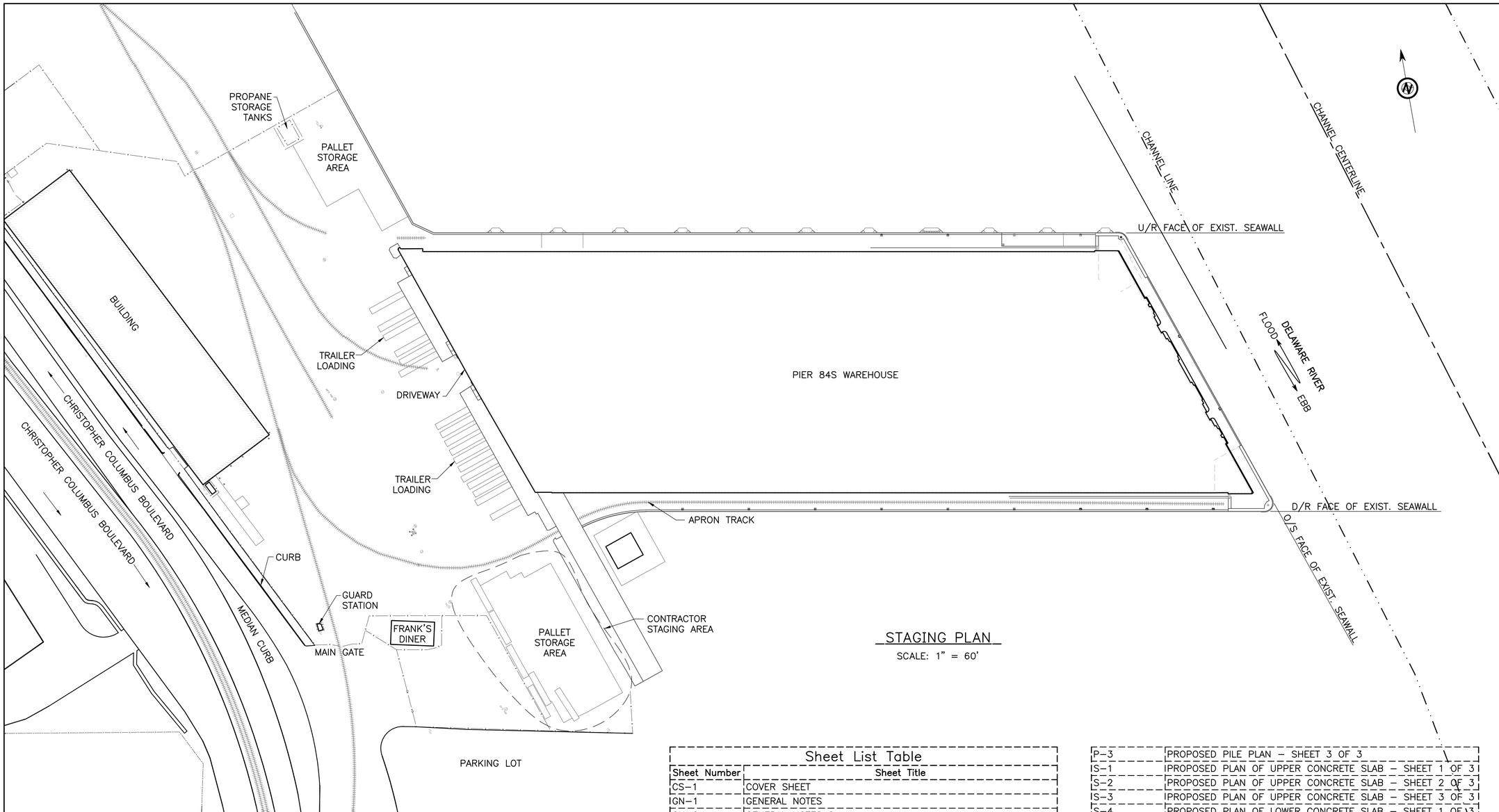

STAGING PLAN

SCALE: 1" = 60'

ISSUED FOR BID
DATE: 09/01/16

LEGEND:

TRACKS

FENCE

NOTES:

1. FOR GENERAL NOTES, SEE DWGS. GN-1 & GN-2.

Sheet List Table

Sheet Number	Sheet Title
CS-1	COVER SHEET
GN-1	GENERAL NOTES
GN-2	GENERAL NOTES 2
GA-1	STAGING PLAN
GA-2	SITE PLAN
GA-3	EXISTING LAYOUT
GA-4	PROPOSED LAYOUT
DM-1	DEMOLITION PLAN OF SOUTHEAST CORNER
DM-2	DEMOLITION PLAN OF OUTSHORE
DM-3	DEMOLITION PLAN OF NORTHEAST CORNER
DM-4	DEMOLITION OF NORTHSIDE
DM-5	DEMOLITION OF INTERIOR TRACKS
DM-6	DEMOLITION SECTIONS
GS-1	PIPE COLLAR DETAILS - SHEET 1 OF 2
GS-2	PIPE COLLAR DETAILS - SHEET 2 OF 2
GS-3	MISC. STEEL & CONC. REINFORCEMENT DETAILS
IP-1	PROPOSED PILE PLAN - SHEET 1 OF 3
P-2	PROPOSED PILE PLAN - SHEET 2 OF 3
P-3	PROPOSED PILE PLAN - SHEET 3 OF 3
IS-1	PROPOSED PLAN OF UPPER CONCRETE SLAB - SHEET 1 OF 3
S-2	PROPOSED PLAN OF UPPER CONCRETE SLAB - SHEET 2 OF 3
IS-3	PROPOSED PLAN OF UPPER CONCRETE SLAB - SHEET 3 OF 3
S-4	PROPOSED PLAN OF LOWER CONCRETE SLAB - SHEET 1 OF 3
S-5	PROPOSED PLAN OF LOWER CONCRETE SLAB - SHEET 2 OF 3
S-6	PROPOSED PLAN OF LOWER CONCRETE SLAB - SHEET 3 OF 3
S-7	SEAWALL REINFORCEMENT BEAM DETAILS
S-8	SEAWALL REINFORCEMENT BEAM DETAILS
S-9	PROPOSED SECTION OF CONCRETE SLAB
S-10	PROPOSED SECTIONS OF SOUTHEAST CORNER
S-11	PROPOSED SECTIONS OF NORTHEAST CORNER
S-12	PROPOSED CONCRETE SLAB - DETAILS
S-13	MICROPILE DETAILS
S-14	PROPOSED NORTHEAST CORNER PLAN AND DETAILS
S-15	PROPOSED NORTHEAST CORNER SEAWALL DETAILS
S-16	PROPOSED DRAINAGE PLAN OF LOWER CONCRETE SLAB
S-17	SECTION THRU UPRIVER SEAWALL
S-18	SECTION THRU UPRIVER SEAWALL AT BOLLARD
S-19	PROPOSED SECTIONS OF NORTH & SOUTH INT. SLABS

REV.	DESCRIPTION	BY	DATE
1	ISSUED FOR BID	MGW	09/01/16

PRPA
PHILADELPHIA,PA
PIER 84 SOUTH
STAGING PLAN

URBAN ENGINEERS, INC.
PORTS & WATERWAYS DIVISION
530 WALNUT STREET
PHILADELPHIA, PA. 19106-3685
PHONE (215) 922-8080 FAX (215) 922-8082

DESIGNED BY: MGW/PB
DRAWN BY: VKW/PB
APPROVED BY: MGW
PROJECT NO: 16-126.1

DATE: 11/19/10

SHEET 4 OF 38

GA-1

SEAL
COMMONWEALTH OF PENNSYLVANIA
REGISTERED PROFESSIONAL
Michael G. Wagner
ENGINEER
No. PE071324

BY: _____
DATE: _____

T:\PROJECTS\On-Going\2006 Projects\601300 PRPA Pier 84S Rehab\Work - 2010\Drawings\FINAL\GA-1 STAGING PLAN.dwg

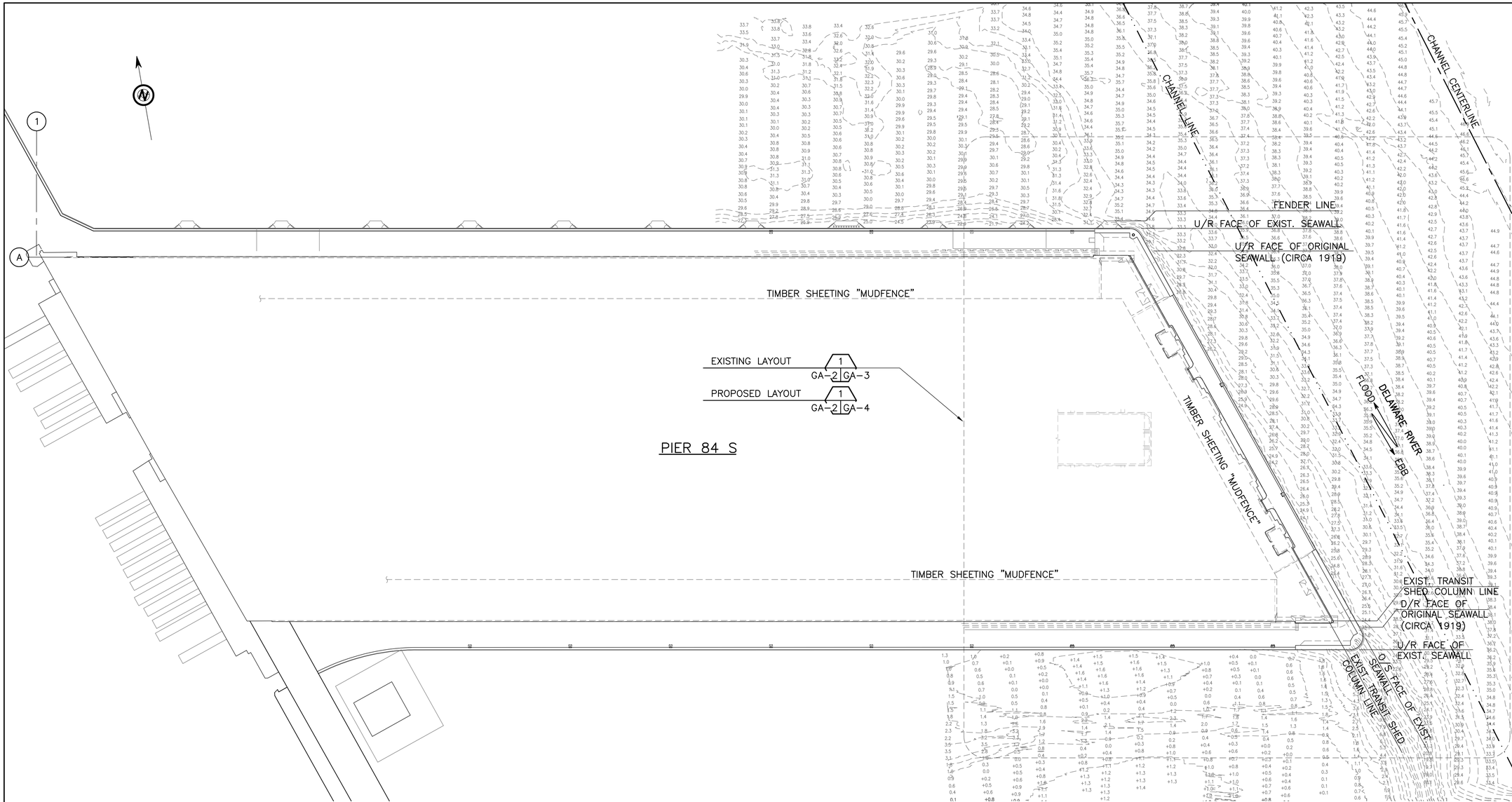

NOTES:

1. FOR GENERAL NOTES, SEE DWGS. GN-1 & GN-2.

SITE PLAN

SCALE: 1" = 40'

ISSUED FOR BID

DATE: 09/01/16

REV.	DESCRIPTION	BY	DATE
1	ISSUED FOR BID	MGW	09/01/16

PHILADELPHIA,PA

PIER 84 SOUTH

SITE PLAN

PRPA

URBAN ENGINEERS, INC.
PORTS & WATERWAYS DIVISION
530 WALNUT STREET
PHILADELPHIA, PA. 19106-3685
PHONE (215) 922-8080 FAX (215) 922-8082

DRAWN BY: VKW/PB
DESIGNED BY: MGW/PB
PROJECT NO: 16-126.1
APPROVED BY: MGW

DATE: 11/19/10

SHEET 5 OF 38

GA-2

SEAL

COMMONWEALTH OF PENNSYLVANIA
REGISTERED PROFESSIONAL ENGINEER
Michael G. Wagner
No. PE071324

BY:

DATE:

T:\PROJECTS\On-Going\2006 Projects\601300 PRPA Pier 84S Rehab\Work - 2010\Drawings\FINAL\GA-2 SITE PLAN.dwg

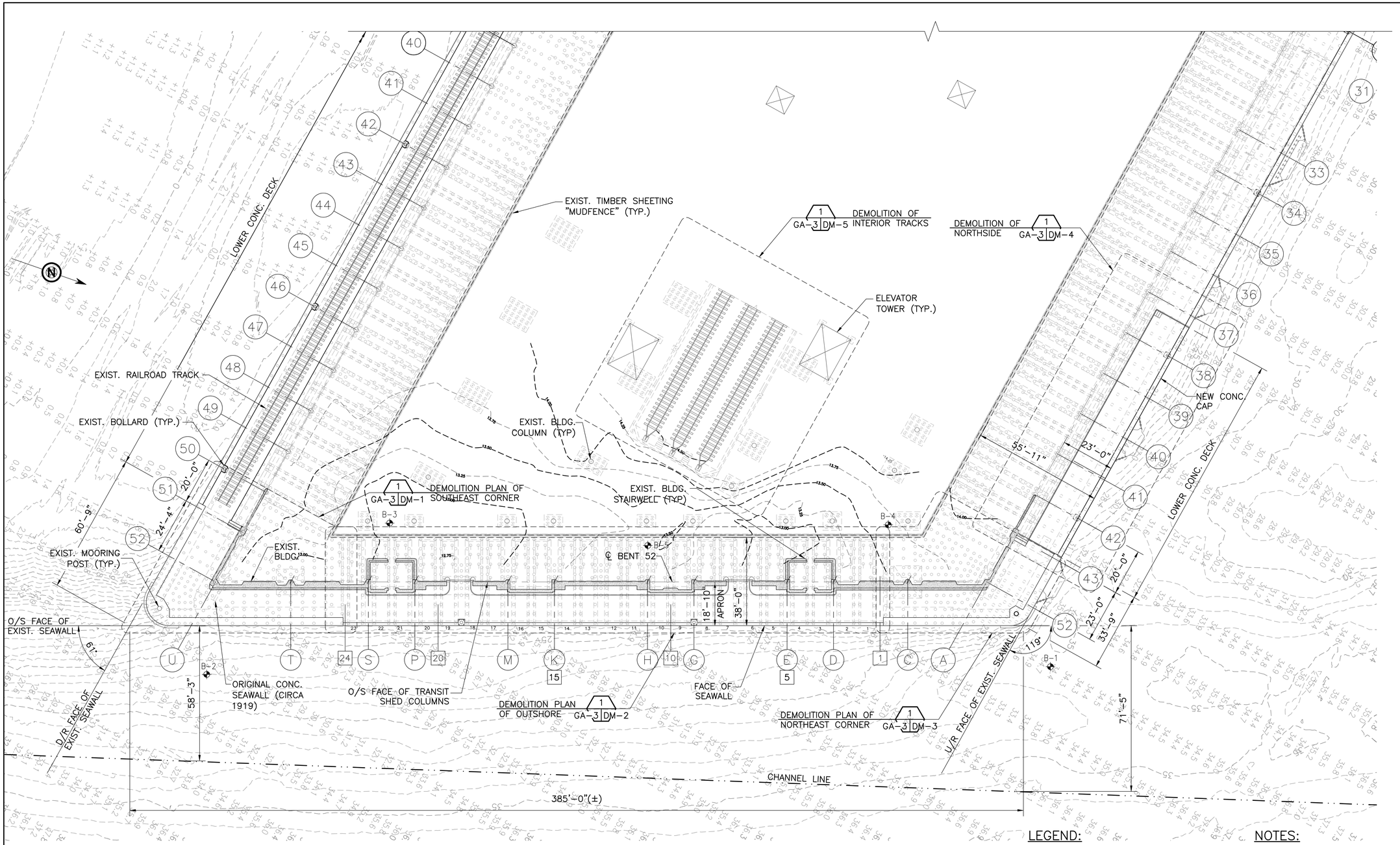

EXISTING LAYOUT
GA-2 GA-3 SCALE: 1" = 20'-0"
VIEW ROTATED

SCALE IN FEET

LEGEND:

- EXIST. TIMBER PLUMB PILE
- EXIST. TIMBER BATTER PILE
- EXIST. CONCRETE PILE
- B-# SOIL BORING LOCATION
- # BENT NUMBER
- X BUILDING COLUMN/ROW NUMBER

NOTES:

1. FOR GENERAL NOTES, SEE DWGS. GN-1 & GN-2.

ISSUED FOR BID
DATE: 09/01/16

REV.	DESCRIPTION	BY	DATE
1	ISSUED FOR BID	MGW	09/01/16

PHILADELPHIA,PA
PRPA
PIER 84 SOUTH
EXISTING LAYOUT

URBAN ENGINEERS, INC.
PORTS & WATERWAYS DIVISION
530 WALNUT STREET
PHILADELPHIA, PA. 19106-3685
PHONE (215) 922-8080 FAX (215) 922-8082

DRAWN BY: VKW/PB
DESIGNED BY: MGW/PB
PROJECT NO: 16-126.1
APPROVED BY: MGW

DATE: 11/19/10
SHEET 6 OF 38
GA-3

SEAL
COMMONWEALTH OF PENNSYLVANIA
REGISTERED PROFESSIONAL ENGINEER
Michael G. Wagner
No. PE071324

BY:
DATE:

T:\PROJECTS\On-Going\2006 Projects\601300 PRPA Pier 84S Rehab\Work - 2010\Drawings\FINAL\GA-3 EXISTING LAYOUT.dwg

EXIST. TIMBER SHEETING "MUDFENCE" (TYP.)

TEMPORARY INTERIOR DUST-CONTROL WALL (SEE DWG. GN-2 FOR REQUIREMENTS)

NEW CONC. SLAB

LOWER CONC. DECK

EXIST. RAILROAD TRACK

EXIST. BOLLARD (TYP.)

EXIST. MOORING POST (TYP.)

EXIST. BLDG.

EXIST. BLDG. COLUMN (TYP)

EXIST. BLDG. STAIRWELL (TYP)

℄ BENT 52

NEW CONC. CAP

NEW CONC. CAP

LOWER CONC. DECK

O/S FACE OF EXIST. SEAWALL

D/R FACE OF EXIST. SEAWALL

FACE OF SEAWALL

NEW CONC. BEAM

NEW CONC. SEAWALL

U/R FACE OF EXIST. SEAWALL

CHANNEL LINE

385'-0"(±)

60'-9"

24'-4"

20'-0"

61'

58'-3"

38'-0"

18'-10 1/8" APRON

55'-11"

23'-0"

20'-0"

23'-0"

33'-9"

119'

71'-5"

LEGEND:

- EXIST. TIMBER PLUMB PILE
- EXIST. TIMBER BATTER PILE
- EXIST. CONCRETE PILE
- # BENT NUMBER
- (X) BUILDING COLUMN/ROW NUMBER
- NEW CONCRETE
- NEW
- EXISTING

NOTES:

1. FOR GENERAL NOTES, SEE DWGS. GN-1 & GN-2.
2. FOR PILE PLAN, SEE DWGS. P-1 THRU P-3
3. FOR NEW CONCRETE PLAN, SEE DWGS. S-1 THRU S-16.
4. FOR NEW CONCRETE SEAWALL, SEE DWGS. S-14 THRU S-15.

DELAWARE RIVER

EBB ← → FLOOD

1 / GA-2 GA-4 PROPOSED LAYOUT

SCALE: 1" = 20'-0"

VIEW ROTATED

20 10 0 20

SCALE IN FEET

ISSUED FOR BID

DATE: 09/01/16

REV.	DESCRIPTION	BY	DATE
1	ISSUED FOR BID	MGW	09/01/16

PHILADELPHIA, PA

PIER 84 SOUTH

PRPA

PROPOSED LAYOUT

URBAN ENGINEERS, INC.
PORTS & WATERWAYS DIVISION
530 WALNUT STREET
PHILADELPHIA, PA. 19106-3685
PHONE (215) 922-8080 FAX (215) 922-8082

DRAWN BY: VKW/PB

DESIGNED BY: MGW/PB

PROJECT NO: 16-126.1

APPROVED BY: MGW

DATE: 11/19/10

SHEET 7 OF 38

GA-4

SEAL

COMMONWEALTH OF PENNSYLVANIA
REGISTERED PROFESSIONAL ENGINEER
Michael G. Wagner
No. PE071324

BY: _____

DATE: _____

T:\PROJECTS\On-Going\2006 Projects\601300 PRPA Pier 84S Rehab\Work - 2010\Drawings\FINAL\GA-4 PROPOSED LAYOUT.dwg

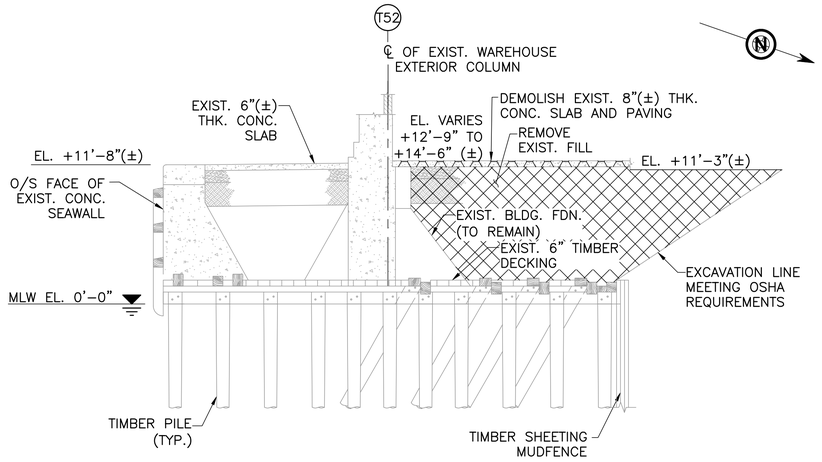

A SECTION
DM-1 DM-1 SCALE: 1" = 5'-0"

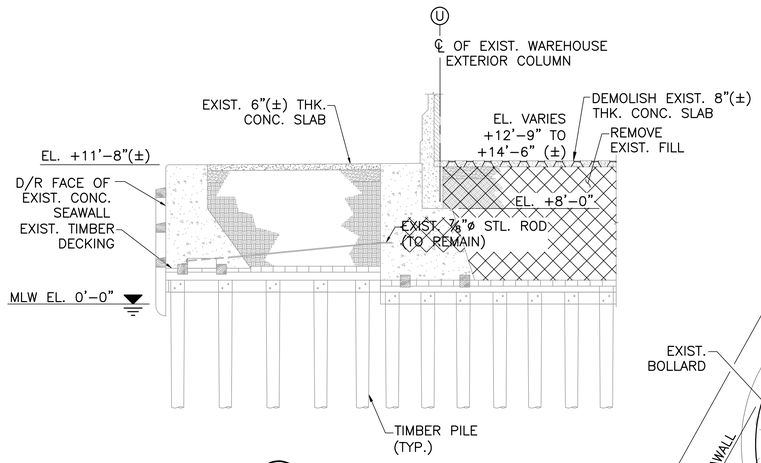

B SECTION
DM-1 DM-1 SCALE: 1" = 5'-0"

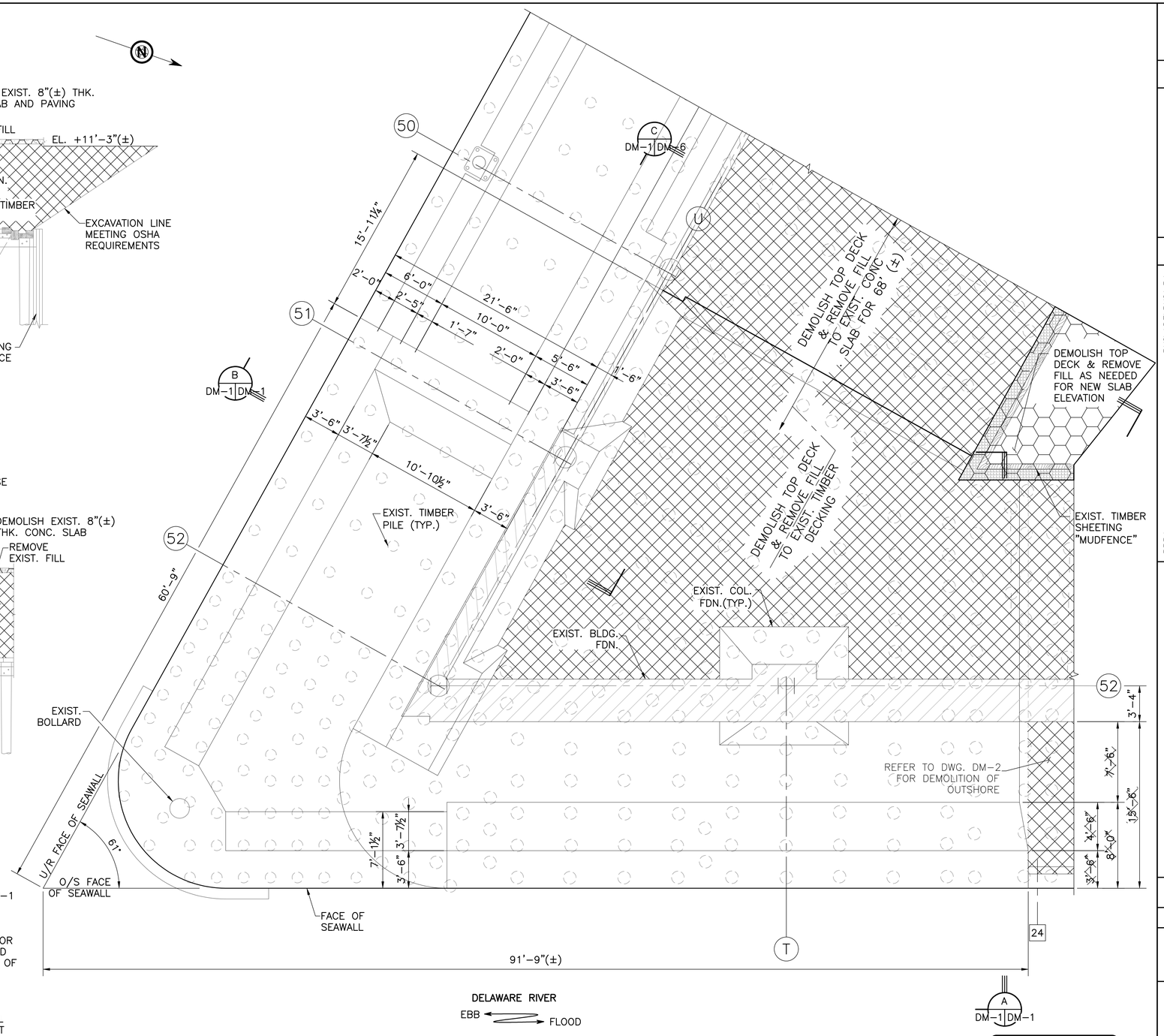

1 DEMOLITION PLAN OF SOUTHEAST CORNER
GA-3 DM-1 SCALE: 1" = 5'-0"

LEGEND:

- EXISTING
- NEW
- EXIST. STEEL PIPE PILE
- EXIST. TIMBER PLUMB PILE
- EXIST. TIMBER BATTER PILE
- EXIST. CONCRETE PILE
- # BENT NUMBER
- (X) BUILDING COLUMN/ROW NUMBER
- EXCAVATION OF EXIST. FILL
- DEMOLITION OF EXIST. CONC. AND ASPHALT PAVING

NOTES:

1. FOR GENERAL NOTES, SEE DWGS. GN-1 & GN-2.
2. ALL DIMENSIONS AND ELEVATIONS SHOWN ARE APPROXIMATE. CONTRACTOR TO FIELD VERIFY ALL DIMENSIONS AND ELEVATIONS PRIOR TO PROCUREMENT OF MATERIALS.
3. REMOVE FILL TO EXISTING TIMBER DECKING. ANY DAMAGED OR DETERIORATED TIMBER DECKING SHALL BE REPAIRED BY THE CONTRACTOR AT NO ADDITIONAL COST TO THE OWNER.
4. EXISTING TIMBER KEYS SHALL BE PRESERVED DURING DEMOLITION, OR REPLACED IN-KIND AFTER DEMOLITION, BY THE CONTRACTOR AT NO ADDITIONAL COST TO THE OWNER.

ISSUED FOR BID
DATE: 09/01/16

REV.	DESCRIPTION	BY	DATE
1	ISSUED FOR BID	MGW	09/01/16

PRPA — PHILADELPHIA, PA

PIER 84 SOUTH

DEMOLITION PLAN OF SOUTHEAST CORNER

URBAN ENGINEERS, INC.
PORTS & WATERWAYS DIVISION
530 WALNUT STREET
PHILADELPHIA, PA. 19106-3685
PHONE (215) 922-8080 FAX (215) 922-8082

DESIGNED BY: MGW/PB
APPROVED BY: MGW
DRAWN BY: VKW/PB
PROJECT NO: 16-126.1

DATE: 11/19/10

SHEET 8 OF 38

DM-1

SEAL: COMMONWEALTH OF PENNSYLVANIA — REGISTERED PROFESSIONAL — Michael G. Wagner — ENGINEER — No. PE071324

BY: _____
DATE: _____

T:\PROJECTS\On-Going\2006 Projects\601300 PRPA Pier 84S Rehab\Work - 2010\Drawings\FINAL\DM-1 DEMOLITION PLAN OF SOUTHEAST CORNER.dwg

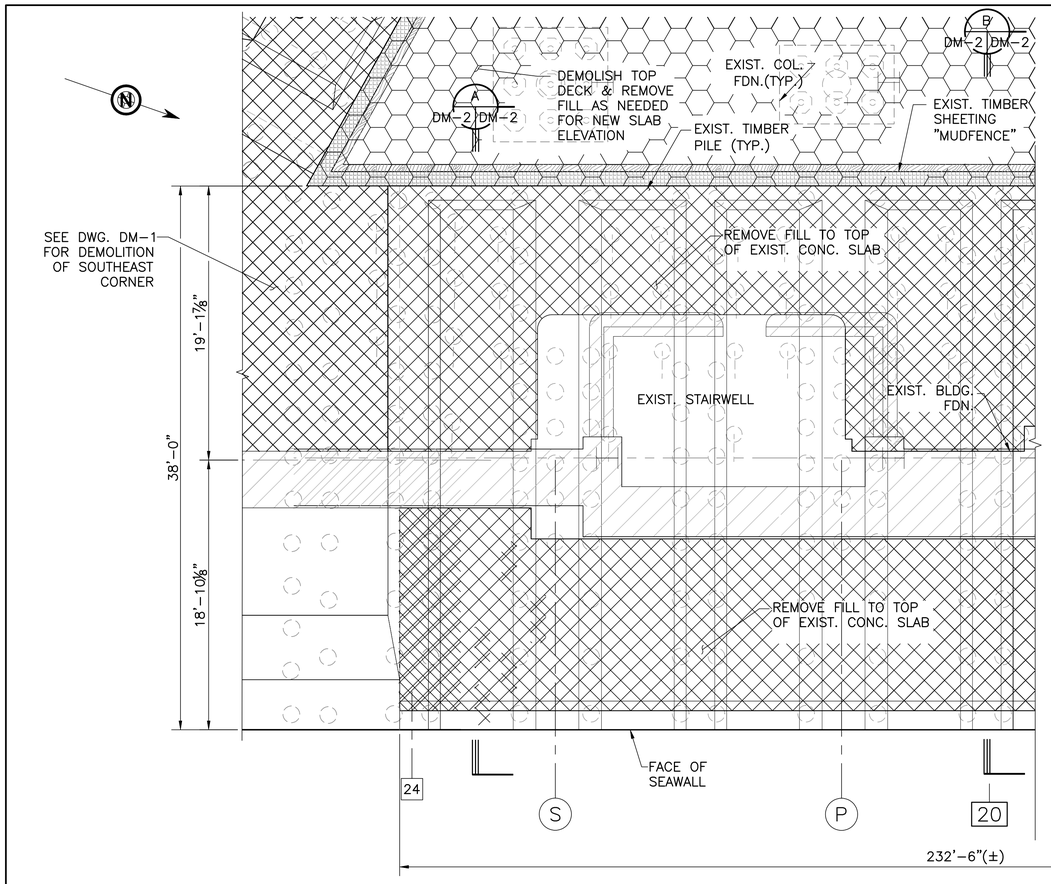

1 DEMOLITION PLAN OF OUTSHORE
GA-3 DM-2 SCALE: 1" = 5'-0"

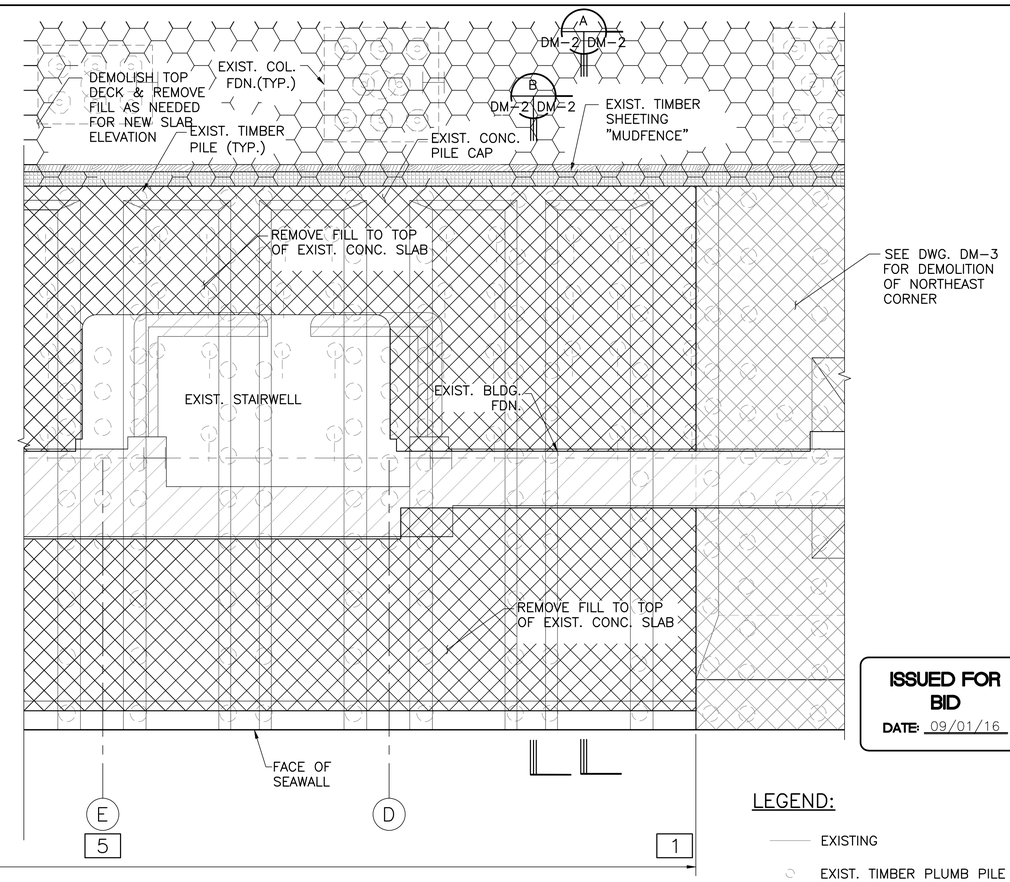

ISSUED FOR BID
DATE: 09/01/16

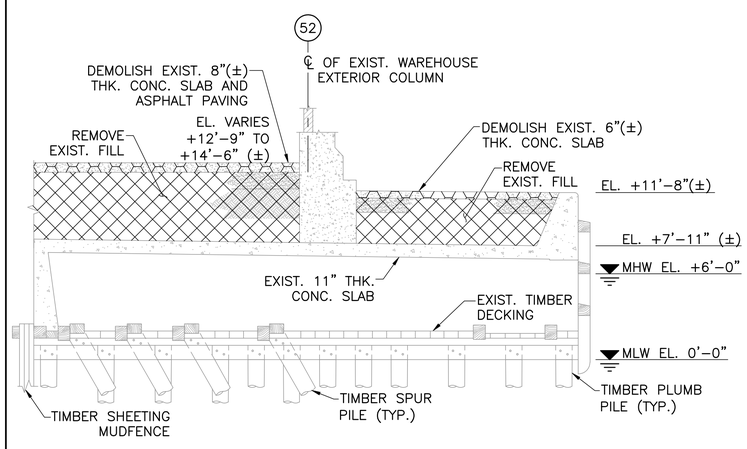

A SECTION
DM-2 DM-2 SCALE: 1" = 5'-0"

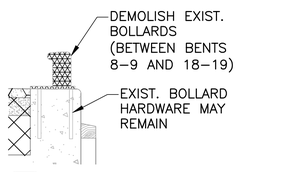

2 EXIST. BOLLARD DEMO
DM-2 DM-2 (BENTS 8-9 AND 18-19)

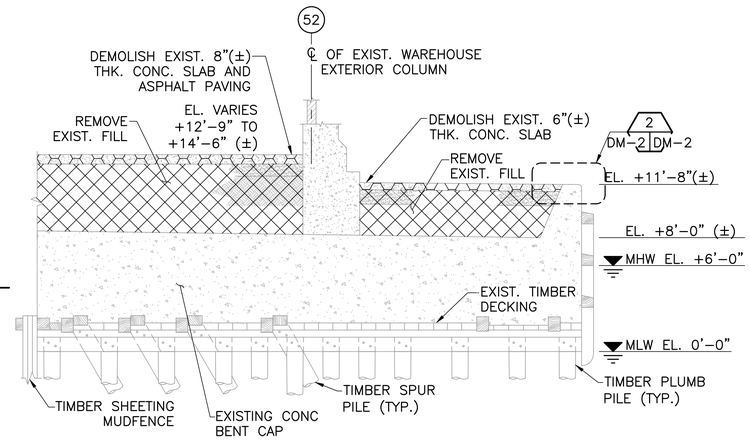

B SECTION
DM-2 DM-2 SCALE: 1" = 5'-0"

LEGEND:

- EXISTING
- EXIST. TIMBER PLUMB PILE
- EXIST. TIMBER BATTER PILE
- # BENT NUMBER
- (X) BUILDING COLUMN/ROW NUMBER
- EXCAVATION OF EXIST. FILL
- DEMOLITION OF EXIST. CONC. AND ASPHALT PAVING
- DEMOLITION OF EXIST. STEEL/CONC. BOLLARD

NOTES:

1. FOR GENERAL NOTES, SEE DWGS. GN-1 & GN-2.
2. ALL DIMENSIONS AND ELEVATIONS SHOWN ARE APPROXIMATE. CONTRACTOR TO FIELD VERIFY ALL DIMENSIONS AND ELEVATIONS PRIOR TO PROCUREMENT OF MATERIALS.
3. REMOVE FILL TO EXISTING TIMBER DECKING. ANY DAMAGED OR DETERIORATED TIMBER DECKING SHALL BE REPAIRED BY THE CONTRACTOR AT NO ADDITIONAL COST TO THE OWNER.
4. EXISTING TIMBER KEYS SHALL BE PRESERVED DURING DEMOLITION, OR REPLACED IN-KIND AFTER DEMOLITION, BY THE CONTRACTOR AT NO ADDITIONAL COST TO THE OWNER.

REV.	DESCRIPTION	BY	DATE
1	ISSUED FOR BID	MGW	09/01/16

PHILADELPHIA,PA
PIER 84 SOUTH
PRPA

DEMOLITION PLAN OF OUTSHORE

URBAN ENGINEERS, INC.
PORTS & WATERWAYS DIVISION
530 WALNUT STREET
PHILADELPHIA, PA. 19106-3685
PHONE (215) 922-8080 FAX (215) 922-8082

DESIGNED BY: MGW/PB
APPROVED BY: MGW
DRAWN BY: VKW/PB
PROJECT NO: 16-126.1

DATE: 11/19/10

SHEET 9 OF 38

DM-2

SEAL
COMMONWEALTH OF PENNSYLVANIA
REGISTERED PROFESSIONAL ENGINEER
Michael G. Wagner
No. PE071324

BY: _____
DATE: _____

T:\PROJECTS\On-Going\2006 Projects\601300 PRPA Pier 84S Rehab\Work - 2010\Drawings\FINAL\DM-2 DEMOLITION PLAN OF OUTSHORE.dwg

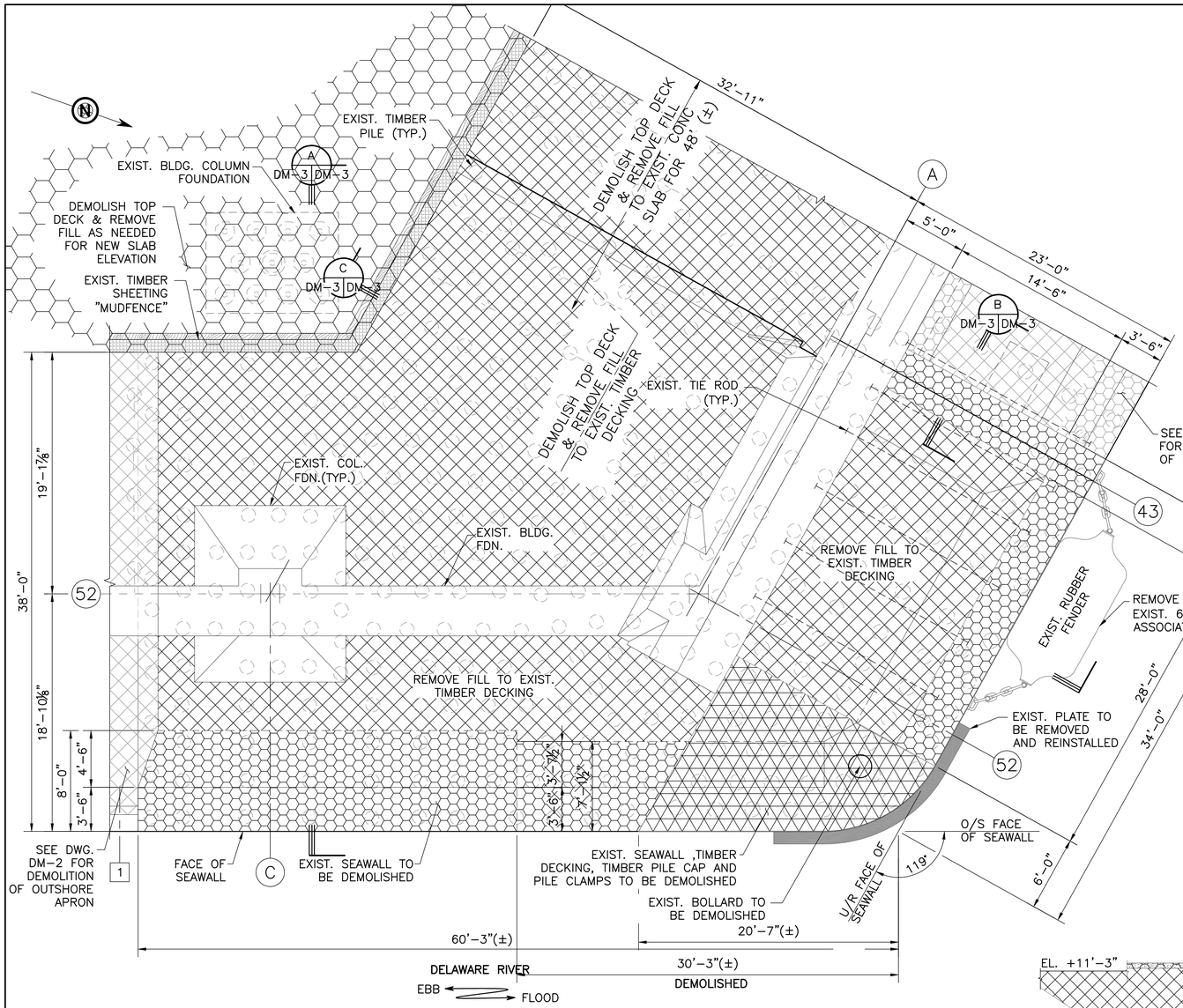

1 DEMOLITION PLAN OF NORTHEAST CORNER
GA-3 | DM-3 SCALE: 1" = 5'-0"

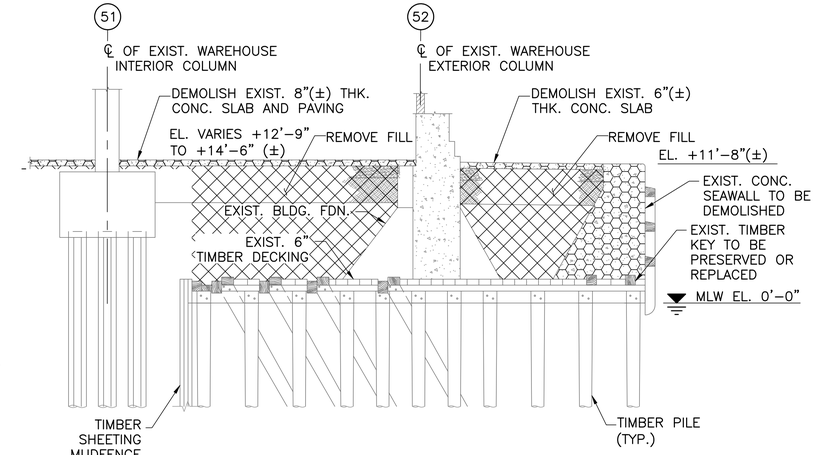

A SECTION
DM-3 | DM-3 SCALE: 1" = 5'-0"

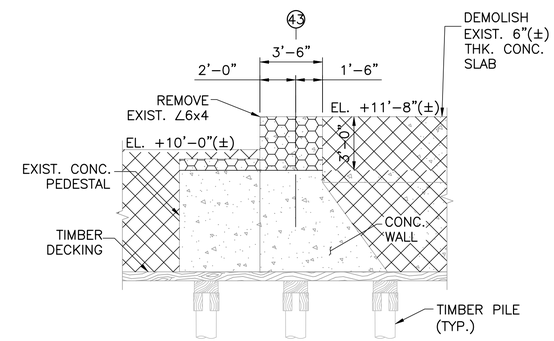

B SECTION
DM-3,DM-4 | DM-3 SCALE: 1" = 3'-4"

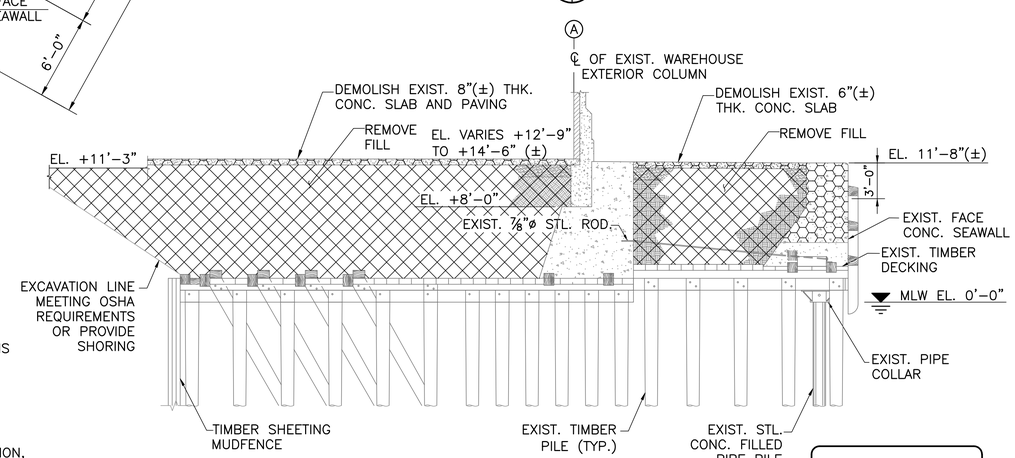

C SECTION
DM-3 | DM-3 SCALE: 1" = 5'-0"

NOTE: FENDER SYSTEM NOT SHOWN FOR CLARITY

LEGEND:

- EXIST. STEEL PIPE PILE
- EXIST. TIMBER PLUMB PILE
- EXIST. TIMBER BATTER PILE
- EXIST. CONCRETE PILE
- # BENT NUMBER
- X BUILDING COLUMN/ROW NUMBER
- EXCAVATION OF EXIST. FILL
- DEMOLITION OF EXIST. CONC. AND ASPHALT PAVING
- DEMOLITION OF EXIST. CONC., TIMBER DECKING, TIMBER PILE CAP AND TIMBER PILE CLAMPS.

NOTES:

1. FOR GENERAL NOTES, SEE DWGS. GN-1 & GN-2.
2. ALL DIMENSIONS AND ELEVATIONS SHOWN ARE APPROXIMATE. CONTRACTOR TO FIELD VERIFY ALL DIMENSIONS AND ELEVATIONS PRIOR TO PROCUREMENT OF MATERIALS.
3. REMOVE FILL TO EXISTING TIMBER DECKING. ANY DAMAGED OR DETERIORATED TIMBER DECKING SHALL BE REPAIRED BY THE CONTRACTOR AT NO ADDITIONAL COST TO THE OWNER.
4. EXISTING TIMBER KEYS SHALL BE PRESERVED DURING DEMOLITION, OR REPLACED IN-KIND AFTER DEMOLITION, BY THE CONTRACTOR AT NO ADDITIONAL COST TO THE OWNER.
6. FENDERS SHALL BE REINSTALLED IN THE SAME LOCATION USING THE SAME CHAINS AND CHAIN PADEYE PLATES. THE CONTRACTOR SHALL REPLACE THE PLATE ANCHOR BOLTS IN KIND AND CAST THE ANCHORS INTO THE NEW SEAWALL.

REV.	DESCRIPTION	BY	DATE
1	ISSUED FOR BID	MGW	09/01/16

PHILADELPHIA,PA

PIER 84 SOUTH

PRPA

DEMOLITION PLAN OF NORTHEAST CORNER

URBAN ENGINEERS, INC.
PORTS & WATERWAYS DIVISION
530 WALNUT STREET
PHILADELPHIA, PA. 19106-3685
PHONE (215) 922-8080 FAX (215) 922-8082

DRAWN BY: VKW/PB
DESIGNED BY: MGW/PB
PROJECT NO: 16-126.1
APPROVED BY: MGW

DATE: 11/19/10

SHEET 10 OF 38

DM-3

SEAL: COMMONWEALTH OF PENNSYLVANIA REGISTERED PROFESSIONAL ENGINEER Michael G. Wagner No. PE071324

BY:

DATE:

ISSUED FOR BID
DATE: 09/01/16

T:\PROJECTS\On-Going\2006 Projects\601300 PRPA Pier 84S Rehab\Work - 2010\Drawings\FINAL\DM-3 DEMOLITION PLAN OF NORTHEAST CORNER.dwg

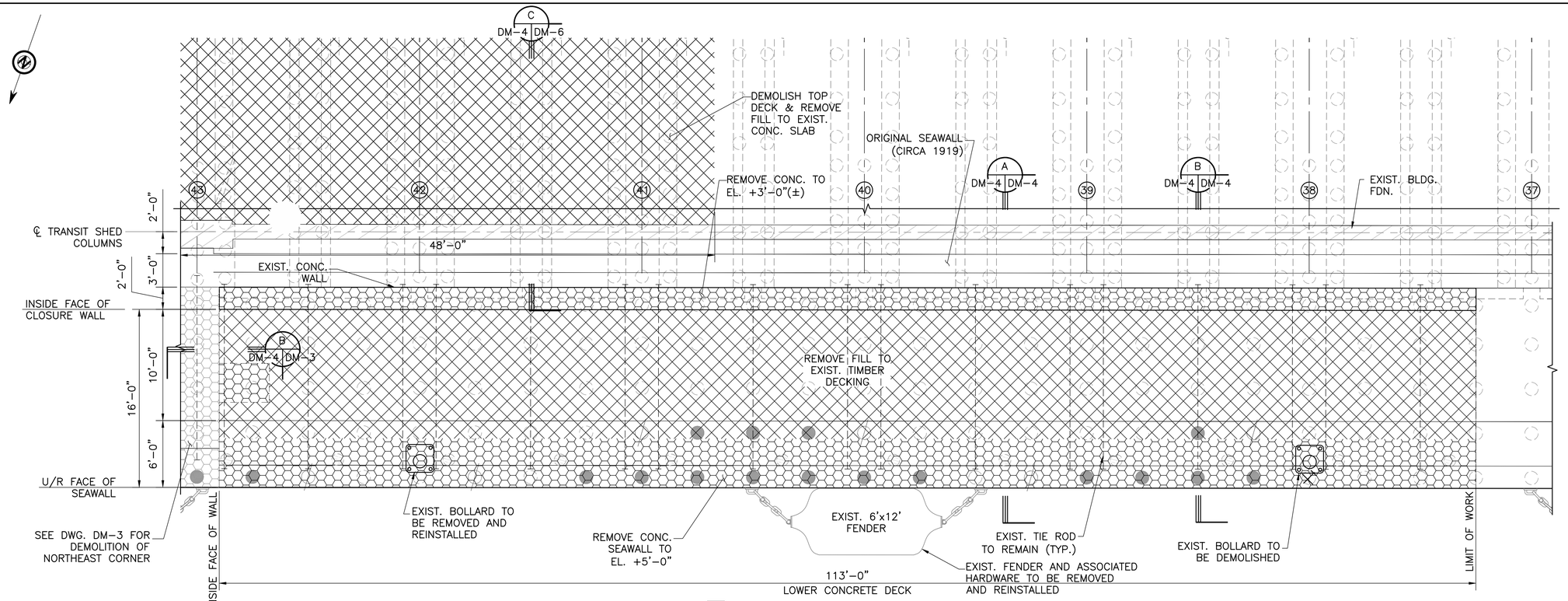

1 PLAN
GA-3 DM-4 SCALE: 1" = 5'-0"

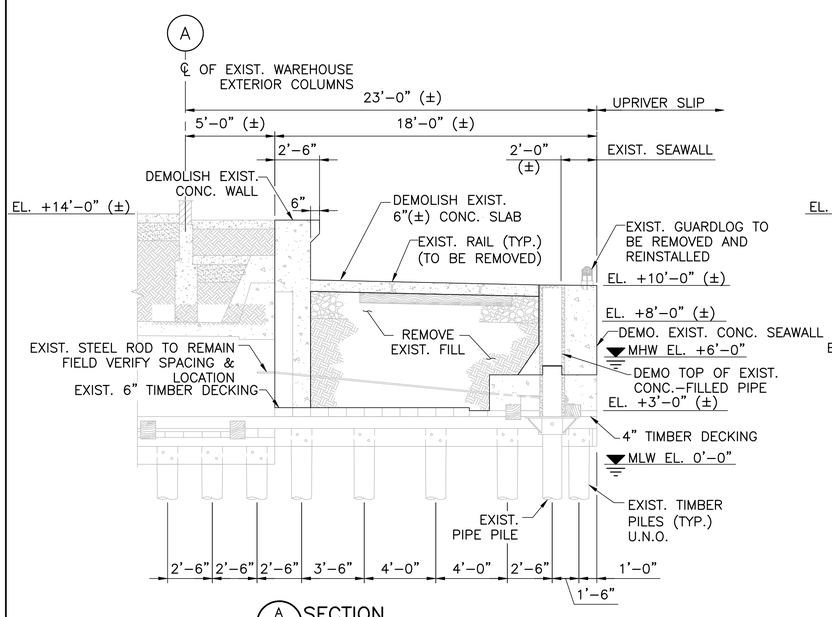

A SECTION
DM-4 DM-4 SCALE: 1/4" = 1'-0"

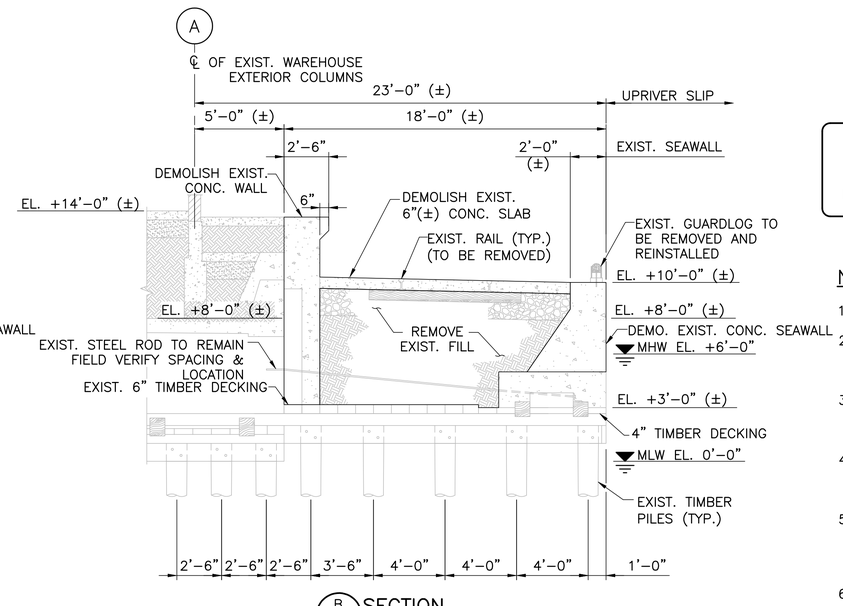

B SECTION
DM-4 DM-4 SCALE: 1/4" = 1'-0"

ISSUED FOR BID
DATE: 09/01/16

LEGEND:

- EXISTING
- EXIST. STEEL PIPE PILE
- EXIST. TIMBER PLUMB PILE
- EXIST. TIMBER BATTER PILE
- MISSING TIMBER PILE
- SPLIT TIMBER PILE
- (X) BUILDING COLUMN/ROW NUMBER
- EXCAVATION OF EXIST. FILL
- DEMOLITION OF EXIST. CONC. AND ASPHALT PAVING (WHERE APPLICABLE)

NOTES:

1. FOR GENERAL NOTES, SEE DWGS. GN-1 & DM-2.
2. ALL DIMENSIONS AND ELEVATIONS SHOWN ARE APPROXIMATE. CONTRACTOR TO FIELD VERIFY ALL DIMENSIONS AND ELEVATIONS PRIOR TO PROCUREMENT OF MATERIALS.
3. REMOVE FILL TO EXISTING TIMBER DECKING. ANY DAMAGED OR DETERIORATED TIMBER DECKING SHALL BE REPAIRED BY THE CONTRACTOR AT NO ADDITIONAL COST TO THE OWNER.
4. EXISTING TIMBER KEYS SHALL BE PRESERVED DURING DEMOLITION, OR REPLACED IN-KIND AFTER DEMOLITION, BY THE CONTRACTOR AT NO ADDITIONAL COST TO THE OWNER.
5. CARE SHALL BE TAKEN DURING DEMOLITION TO PREVENT DAMAGE TO THE EXISTING BOLLARD TO BE REINSTALLED. PARTICULAR CARE SHALL BE TAKEN IF FLAME CUTTING IS PROPOSED. EXISTING HARDWARE MAY BE CUT AND REPLACED.
6. FENDERS SHALL BE REINSTALLED IN THE SAME LOCATION USING THE SAME CHAINS AND CHAIN PADEYE PLATES. THE CONTRACTOR SHALL REPLACE THE PLATE ANCHOR BOLTS IN KIND AND CAST THE ANCHORS INTO THE NEW SEAWALL.

REV.	DESCRIPTION	BY	DATE
1	ISSUED FOR BID	MGW	09/01/16

PRPA
PHILADELPHIA,PA
PIER 84 SOUTH
DEMOLITION OF NORTHSIDE

URBAN ENGINEERS, INC.
PORTS & WATERWAYS DIVISION
530 WALNUT STREET
PHILADELPHIA, PA. 19106-3685
PHONE (215) 922-8080 FAX (215) 922-8082

DESIGNED BY: MGW/PB
APPROVED BY: MGW
DRAWN BY: VKW/PB
PROJECT NO: 16-126.1
DATE: 11/19/10
SHEET 11 OF 38
DM-4

SEAL
COMMONWEALTH OF PENNSYLVANIA
REGISTERED PROFESSIONAL
Michael G. Wagner
ENGINEER
No. PE071324
BY:
DATE:

T:\PROJECTS\On-Going\2006 Projects\601300 PRPA Pier 84S Rehab\Work - 2010\Drawings\FINAL\DM-4 DEMOLITION OF NORTHSIDE.dwg

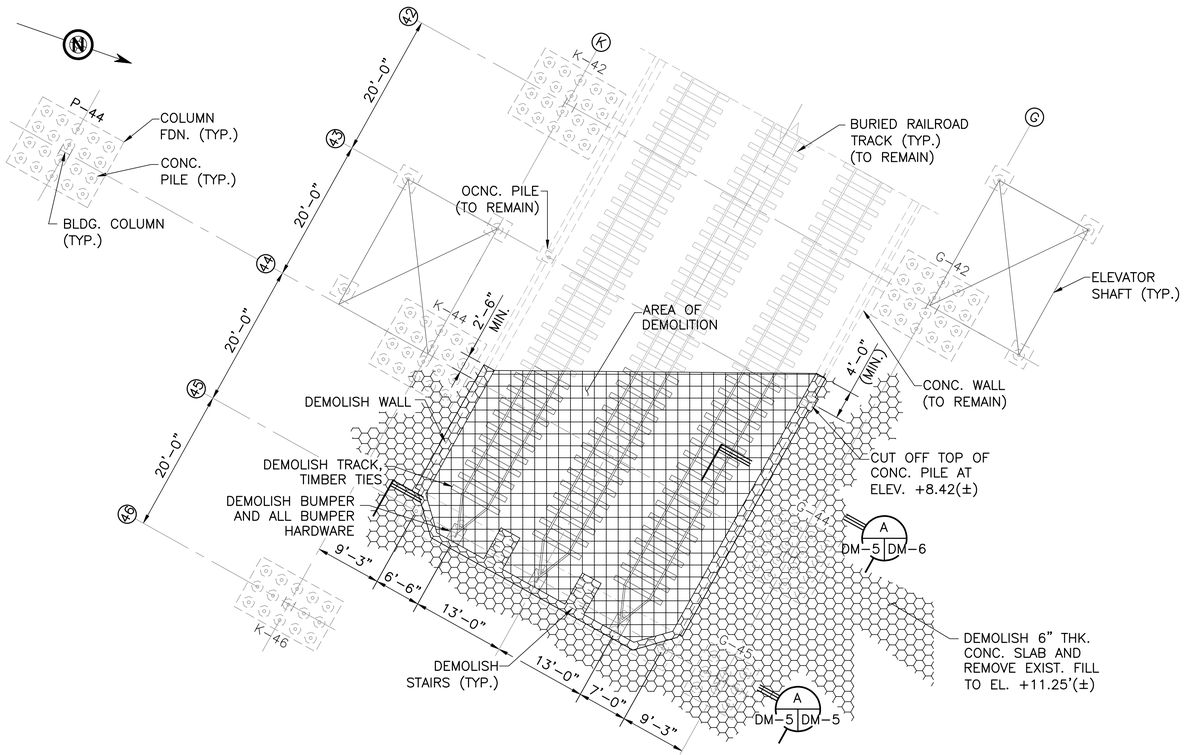

PLAN
SCALE: 1" = 10'-0"

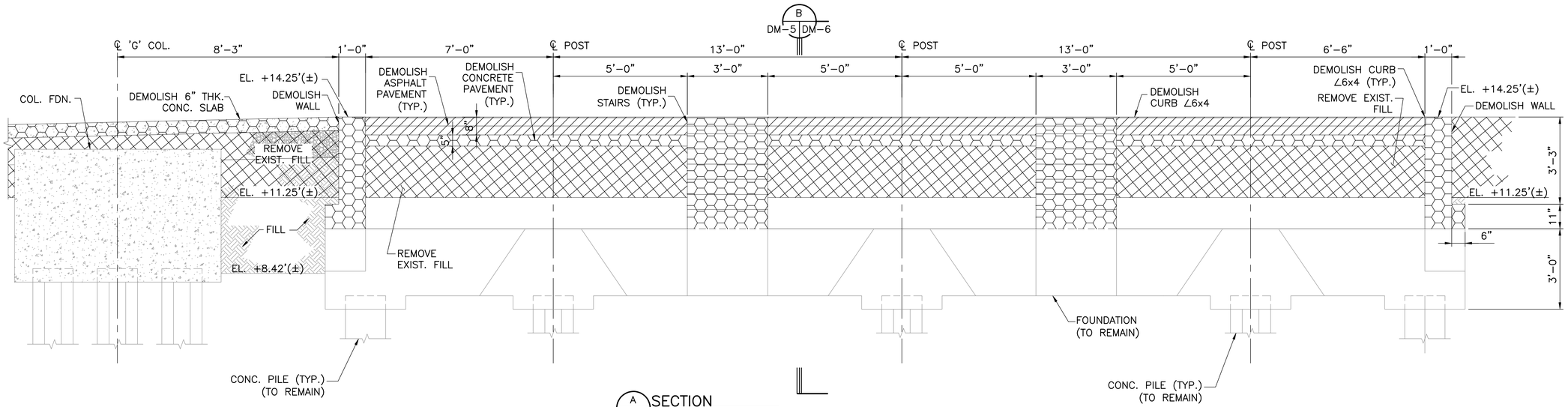

A SECTION
DM-5 DM-5 SCALE: 1/2" = 1'-0"

LEGEND:

- EXISTING
- EXIST. CONC. PILE
- (X) BUILDING COLUMN/ROW NUMBER
- EXCAVATION OF EXIST. FILL
- DEMOLITION OF EXIST. CONC.
- DEMOLITION OF EXIST. ASPHALT

NOTES:

1. FOR GENERAL NOTES, SEE DWGS. GN-1 & GN-2.
2. ALL DIMENSIONS AND ELEVATIONS SHOWN ARE APPROXIMATE. ALL EXISTING HARDWARE AND MATERIAL ARE APPROXIMATE. CONTRACTOR SHALL FIELD VERIFY ALL DIMENSIONS, MATERIAL SIZE, AND QUANTITIES.
3. BUMPER, TRACK AND ASSOCIATED HARDWARE MAY NOT BE PRESENT UNDER EXISTING FILL. CONTRACTOR SHALL REMOVE ALL OBSTRUCTIONS THAT MAY INTERFERE WITH PLACEMENT OF MICROPILES AND CONC. SLAB.
4. EXCAVATE EXISTING FLOOR TO A MIN. EL. OF +11.25' FOR PLACEMENT OF NEW CONC. SLAB.

ISSUED FOR BID
DATE: 09/01/16

REV.	DESCRIPTION	BY	DATE
1	ISSUED FOR BID	MGW	09/01/16

PRPA
PHILADELPHIA,PA
PIER 84 SOUTH

DEMOLITION OF INTERIOR TRACKS

URBAN ENGINEERS, INC.
PORTS & WATERWAYS DIVISION
530 WALNUT STREET
PHILADELPHIA, PA. 19106-3685
PHONE (215) 922-8080 FAX (215) 922-8082

DRAWN BY: VKW/PB
DESIGNED BY: MGW/PB
PROJECT NO: 16-126.1
APPROVED BY: MGW

DATE: 11/19/10

SHEET 12 OF 38

DM-5

SEAL
COMMONWEALTH OF PENNSYLVANIA
REGISTERED PROFESSIONAL ENGINEER
Michael G. Wagner
No. PE071324

BY:
DATE:

T:\PROJECTS\On-Going\2006 Projects\601300 PRPA Pier 84S Rehab\Work - 2010\Drawings\FINAL\DM-6 DEMOLITION SECTIONS.dwg

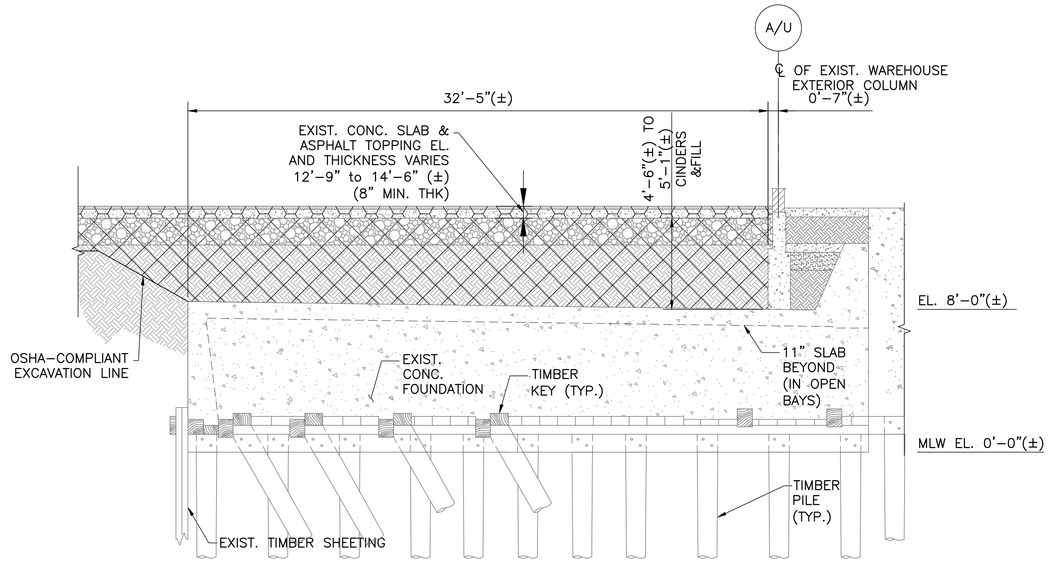

C SECTION
DM-1, DM-4 | DM-6 SCALE: 1/4" = 1'-0"

NOTE: U/R SECTION SHOWN, D/R SECTION IS SIMILAR.

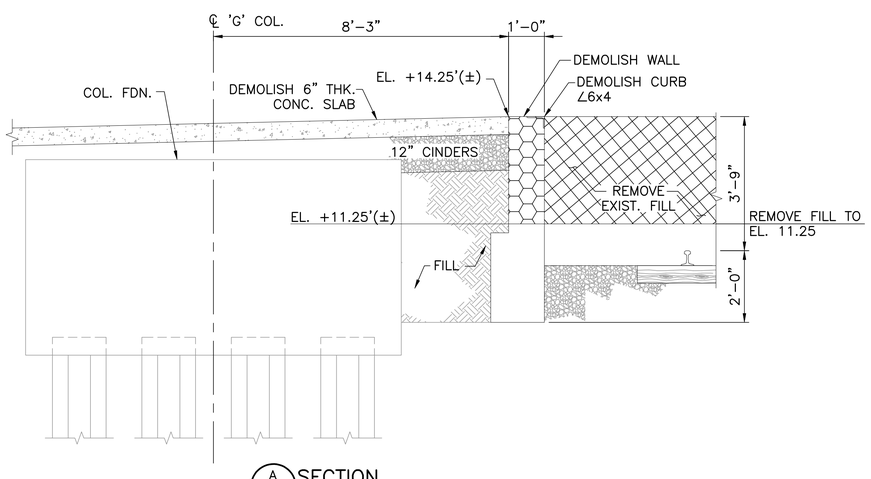

A SECTION
DM-5 | DM-6 SCALE: 1/2" = 1'-0"

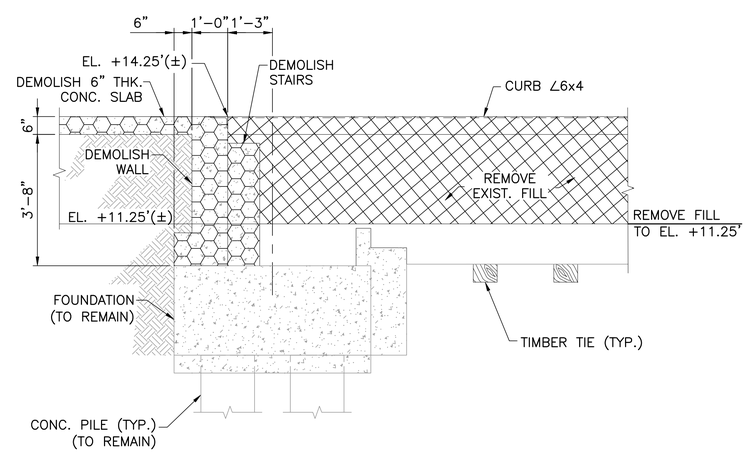

B SECTION
DM-5 | DM-6 SCALE: 1/2" = 1'-0"

ISSUED FOR BID
DATE: 09/01/16

LEGEND:

- EXISTING
- EXCAVATION OF EXIST. FILL
- DEMOLITION OF EXIST. CONC.

NOTES:

1. FOR GENERAL NOTES, SEE DWGS. GN-1 & GN-2.
2. ALL DIMENSIONS AND ELEVATIONS SHOWN ARE APPROXIMATE. ALL EXISTING HARDWARE AND MATERIAL ARE APPROXIMATE. CONTRACTOR SHALL FIELD VERIFY ALL DIMENSIONS, MATERIAL SIZE, AND QUANTITIES.

REV.	DESCRIPTION	BY	DATE
1	ISSUED FOR BID	MGW	09/01/16

PHILADELPHIA,PA
PIER 84 SOUTH
PRPA

DEMOLITION SECTIONS

URBAN ENGINEERS, INC.
PORTS & WATERWAYS DIVISION
530 WALNUT STREET
PHILADELPHIA, PA. 19106-3685
PHONE (215) 922-8080 FAX (215) 922-8082

DRAWN BY: VKW/PB
DESIGNED BY: MGW/PB
PROJECT NO: 16-126.1
APPROVED BY: MGW

DATE: 11/19/10
SHEET 13 OF 38

DM-6

SEAL
COMMONWEALTH OF PENNSYLVANIA
REGISTERED PROFESSIONAL ENGINEER
Michael G. Wagner
No. PE071324

BY:
DATE:

T:\PROJECTS\On-Going\2006 Projects\601300 PRPA Pier 84S Rehab\Work - 2010\Drawings\FINAL\DM-6 DEMOLITION SECTIONS.dwg

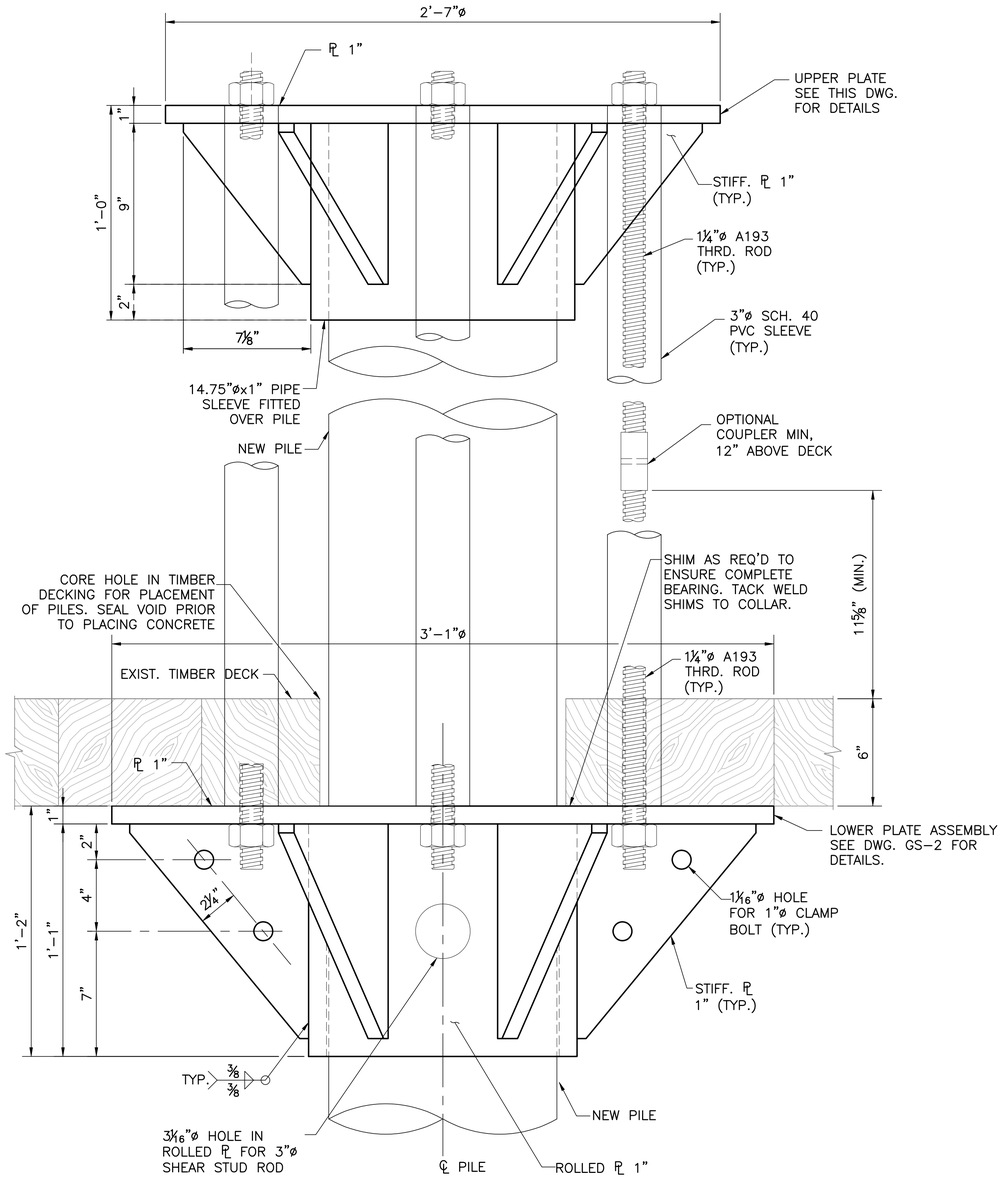

1 DETAIL
S-17 GS-1 SCALE: 3" = 1'-0"

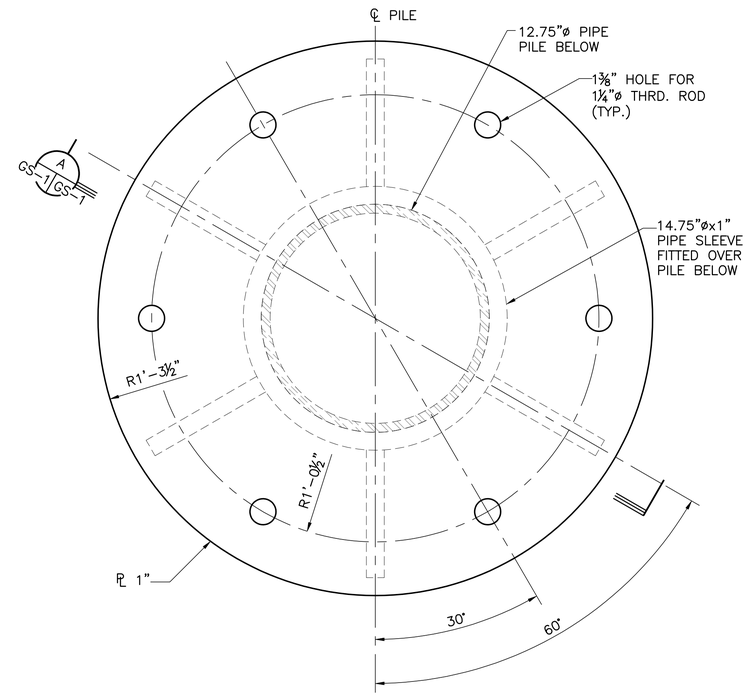

UPPER PLATE ASSEMBLY
SCALE: 3" = 1'-0"

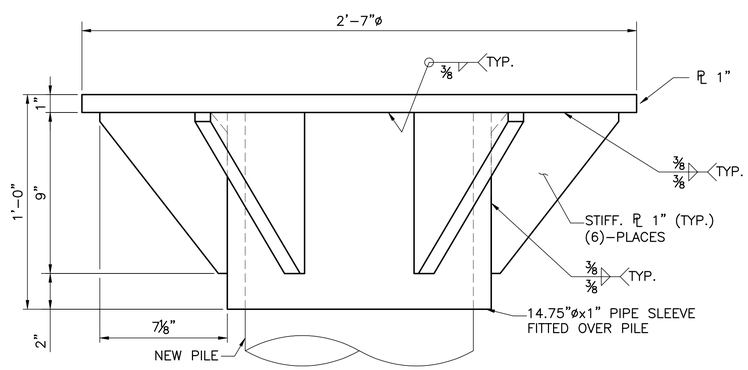

A SECTION
GS-1 GS-1 SCALE: 3" = 1'-0"

ISSUED FOR BID
DATE: 09/01/16

NOTES:

1. FOR GENERAL NOTES, SEE DWGS. GN-1 & GN-2.
2. FOR PILE PLAN, SEE DWG. P-3.
3. FOR DETAILS AND NOTES OF THE THREADED ROD TENSIONING PROCEDURES, SEE DWG. S-17
4. THREADED HANGER RODS SHALL BE ASTM A193 GR. B8M, WITH A MINIMUM TENSILE STRENGTH OF 80 KSI, AND NUTS SHALL CONFORM TO ASTM A194 GR. 8M. WASHERS SHALL BE STAINLESS STEEL 316.
5. STRUCTURAL STEEL SHOWN ON THIS DRAWINGS SHALL BE COAL-TAR EPOXY COATED AFTER SHOP WELDING, AND TOUCHED UP AFTER FIELD WELDING. SURFACES WITHIN 2" OF PROPOSED FIELD WELDS MAY BE LEFT UNCOATED.

REV.	DESCRIPTION	BY	DATE
1	ISSUED FOR BID	MGW	09/01/16

PRPA
PHILADELPHIA,PA
PIER 84 SOUTH
PIPE COLLAR DETAILS - SHEET 1 OF 2

URBAN ENGINEERS, INC.
PORTS & WATERWAYS DIVISION
530 WALNUT STREET
PHILADELPHIA, PA. 19106-3685
PHONE (215) 922-8080 FAX (215) 922-8082

DRAWN BY: VKW/PB
DESIGNED BY: MGW/PB
PROJECT NO: 16-126.1
APPROVED BY: MGW

DATE: 11/19/10
SHEET 14 OF 38

GS-1

SEAL
COMMONWEALTH OF PENNSYLVANIA
REGISTERED PROFESSIONAL ENGINEER
Michael G. Wagner
No. PE071324

BY:
DATE:

T:\PROJECTS\On-Going\2006 Projects\601300 PRPA Pier 84S Rehab\Work - 2010\Drawings\FINAL\GS-2 PIPE COLLAR DETAILS - SHEET 2 OF 2.dwg

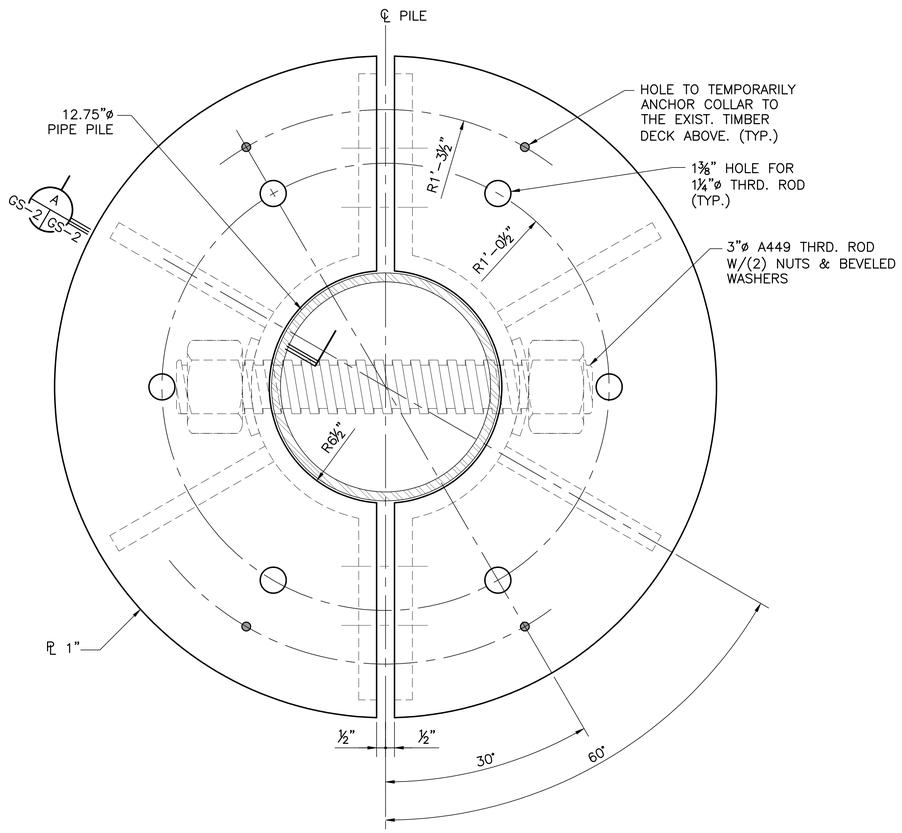

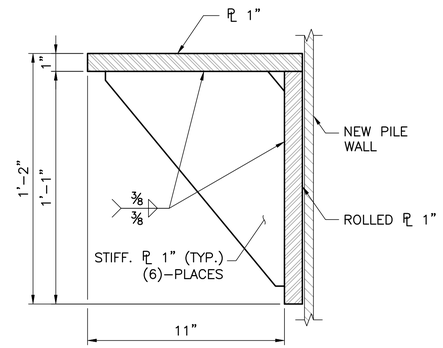

A
GS-2 GS-2 SECTION
SCALE: 3" = 1'-0"

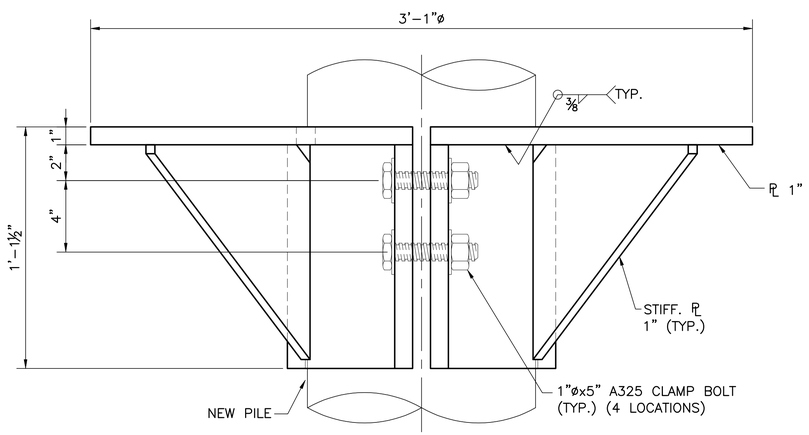

LOWER PLATE ASSEMBLY
SCALE: 3" = 1'-0"

ISSUED FOR BID
DATE: 09/01/16

NOTES:

1. FOR GENERAL NOTES, SEE DWGS. GN-1 & GN-2.
2. FOR PILE PLAN, SEE DWG. P-3.
3. THE CONTRACTOR SHALL TAKE PRECAUTIONS AGAINST FIRE DURING WELDING CLOSE TO THE EXISTING LOW DECK TIMBER STRUCTURE.
4. STRUCTURAL STEEL SHOWN ON THIS DRAWINGS SHALL NOT BE COAL-TAR EPOXY COATED AFTER SHOP WELDING, AND TOUCHED UP AFTER FIELD WELDING. SURFACES WITHIN 2" OF PROPOSED FIELD WELDS MAY BE LEFT UNCOATED.
5. THE CONTRACTOR SHALL REAM 3¹⁄₁₆"ø HOLES IN EACH NEW PILE FOR THE A449 SHEAR ROD. FLAME-CUT HOLES SHALL ONLY BE ALLOWED IF THE DIMENSIONS ARE CAREFULLY CONTROLLED AND THE HOLE SURFACE IS GROUND SMOOTH IN ACCORDANCE WITH THE SURFACE ROUGHNESS REQUIREMENTS OF AISC.

REV.	DESCRIPTION	BY	DATE
1	ISSUED FOR BID	MGW	09/01/16

PRPA
PHILADELPHIA,PA
PIER 84 SOUTH
PIPE COLLAR DETAILS - SHEET 2 OF 2

URBAN ENGINEERS, INC.
PORTS & WATERWAYS DIVISION
530 WALNUT STREET
PHILADELPHIA, PA. 19106-3685
PHONE (215) 922-8080 FAX (215) 922-8082

DRAWN BY: VKW/PB
DESIGNED BY: MGW/PB
PROJECT NO: 16-126.1
APPROVED BY: MGW

DATE: 11/19/10
SHEET 15 OF 38
GS-2

SEAL
COMMONWEALTH OF PENNSYLVANIA
REGISTERED PROFESSIONAL ENGINEER
Michael G. Wagner
No. PE071324
BY: _____
DATE: _____

T:\PROJECTS\On-Going\2006 Projects\601300 PRPA Pier 84S Rehab\Work - 2010\Drawings\FINAL\GS-2 PIPE COLLAR DETAILS - SHEET 2 OF 2.dwg

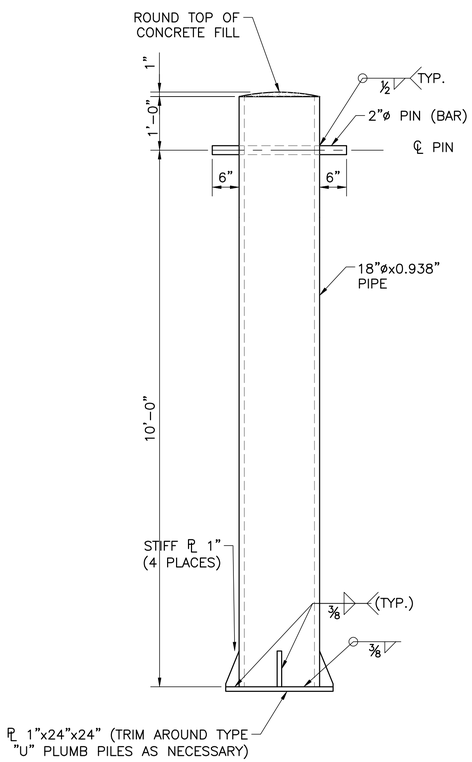

NEW BOLLARD ELEVATION
SCALE: ¾" = 1'-0"

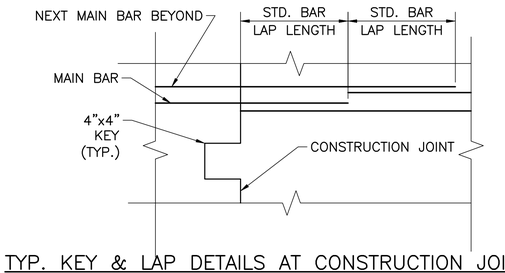

TYP. KEY & LAP DETAILS AT CONSTRUCTION JOINTS
N.T.S.

NOTE: MAIN BARS SHOWN STAGGERED FOR CLARITY, EXTEND EVERY OTHER BAR TO STAGGER LAPS.

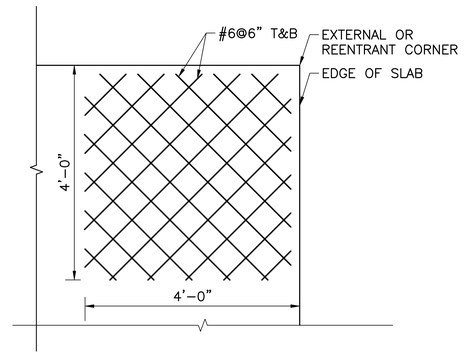

ADDITIONAL REINFORCEMENT AT SLAB CORNERS
N.T.S.

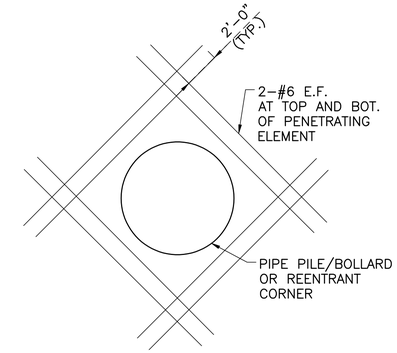

ADDITIONAL REINFORCEMENT AROUND BOLLARD/PIPE PENETRATIONS
WITHIN 6" OF CONCRETE SURFACES
N.T.S.

NOTE: PIPE/BOLLARD SHOWN; REINFORCEMENT AROUND COLUMN FOUNDATIONS AND OTHER SLAB REENTRANT CORNERS SHALL BE SIMILAR.

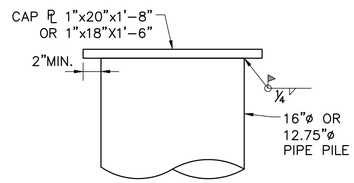

PIPE PILE CAP PLATE DETAIL
SCALE: 1½" = 1'-0"

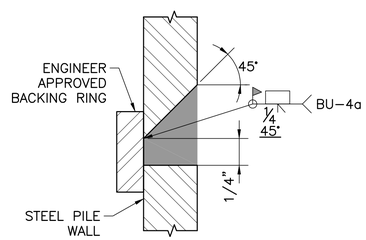

PIPE PILE SPLICE DETAIL
SCALE: 1½" = 1'-0"

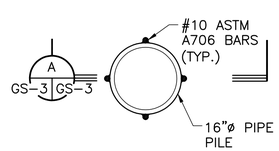

PIPE PILE HOOK PLAN
SCALE: ¾" = 1'-0"

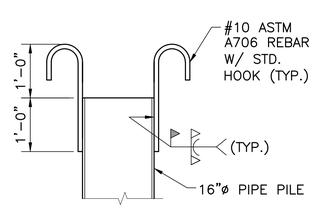

A SECTION
GS-3 GS-3 SCALE: 3/4" = 1'-0"

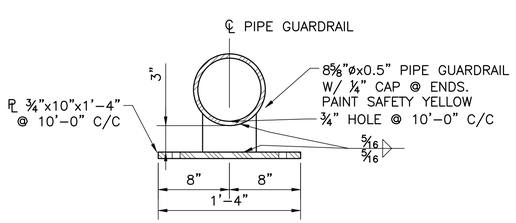

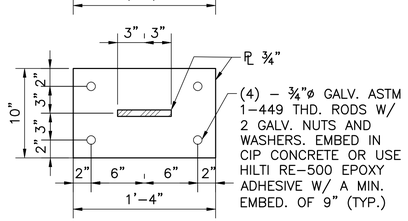

PIPE GURAD RAIL DETAILS
SCALE: 1½" = 1'-0"

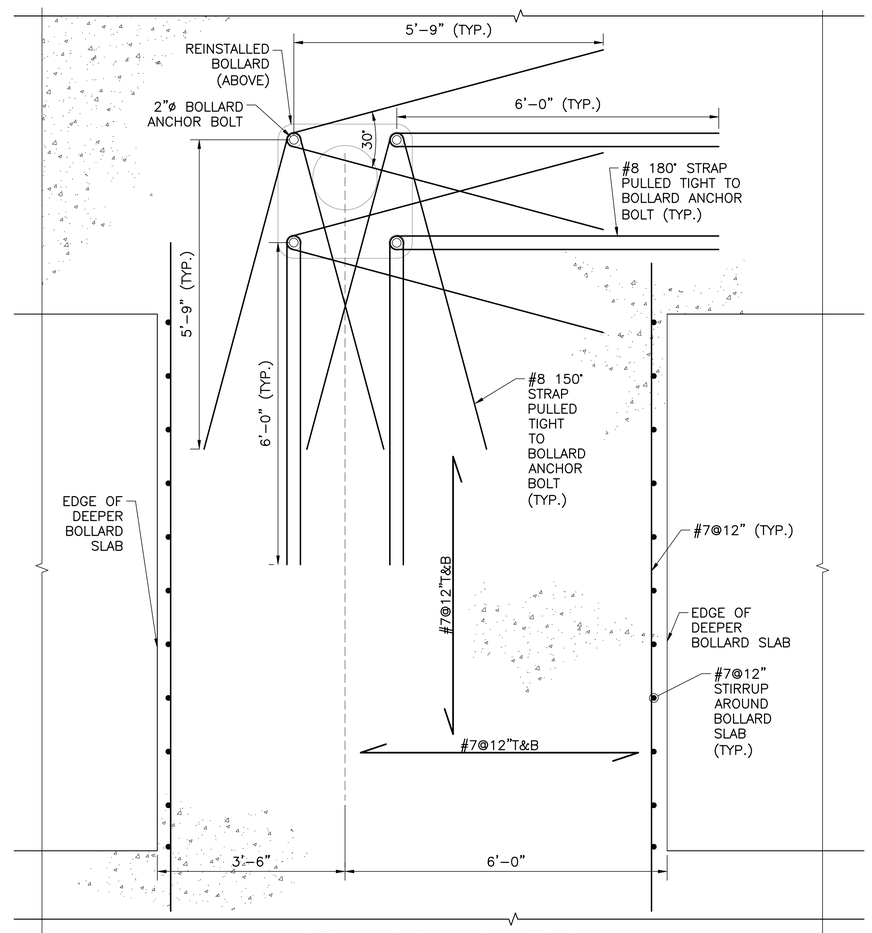

REPLACED BOLLARD STRAP AND SLAB REINFORCEMENT PLAN
SCALE: ¾" = 1'-0"

ISSUED FOR BID
DATE: 09/01/16

NOTES:

1. FOR GENERAL NOTES, SEE DWGS. GN-1 & GN-2.
2. FOR PILE PLAN, SEE DWGS. P-1-P-3.
3. FOR ELEVATION OF THE BOLLARD STRAPS, SEE DWG. S-18.

REV.	DESCRIPTION	BY	DATE
1	ISSUED FOR BID	MGW	09/01/16

PHILADELPHIA,PA
PIER 84 SOUTH
PRPA

MISC. STEEL & CONC. REINFORCEMENT DETAILS

URBAN ENGINEERS, INC.
PORTS & WATERWAYS DIVISION
530 WALNUT STREET
PHILADELPHIA, PA. 19106-3685
PHONE (215) 922-8080 FAX (215) 922-8082

DESIGNED BY: MGW/PB
DRAWN BY: VKW/PB
APPROVED BY: MGW
PROJECT NO: 16-126.1
DATE: 11/19/10
SHEET 16 OF 38

GS-3

SEAL
COMMONWEALTH OF PENNSYLVANIA REGISTERED PROFESSIONAL ENGINEER
Michael G. Wagner
No. PE071324
BY:
DATE:

T:\PROJECTS\On-Going\2006 Projects\601300 PRPA Pier 84S Rehab\Work – 2010\Drawings\FINAL\GS-3 MISC. STEEL & CONC. REINFORCEMENT DETAILS.dwg

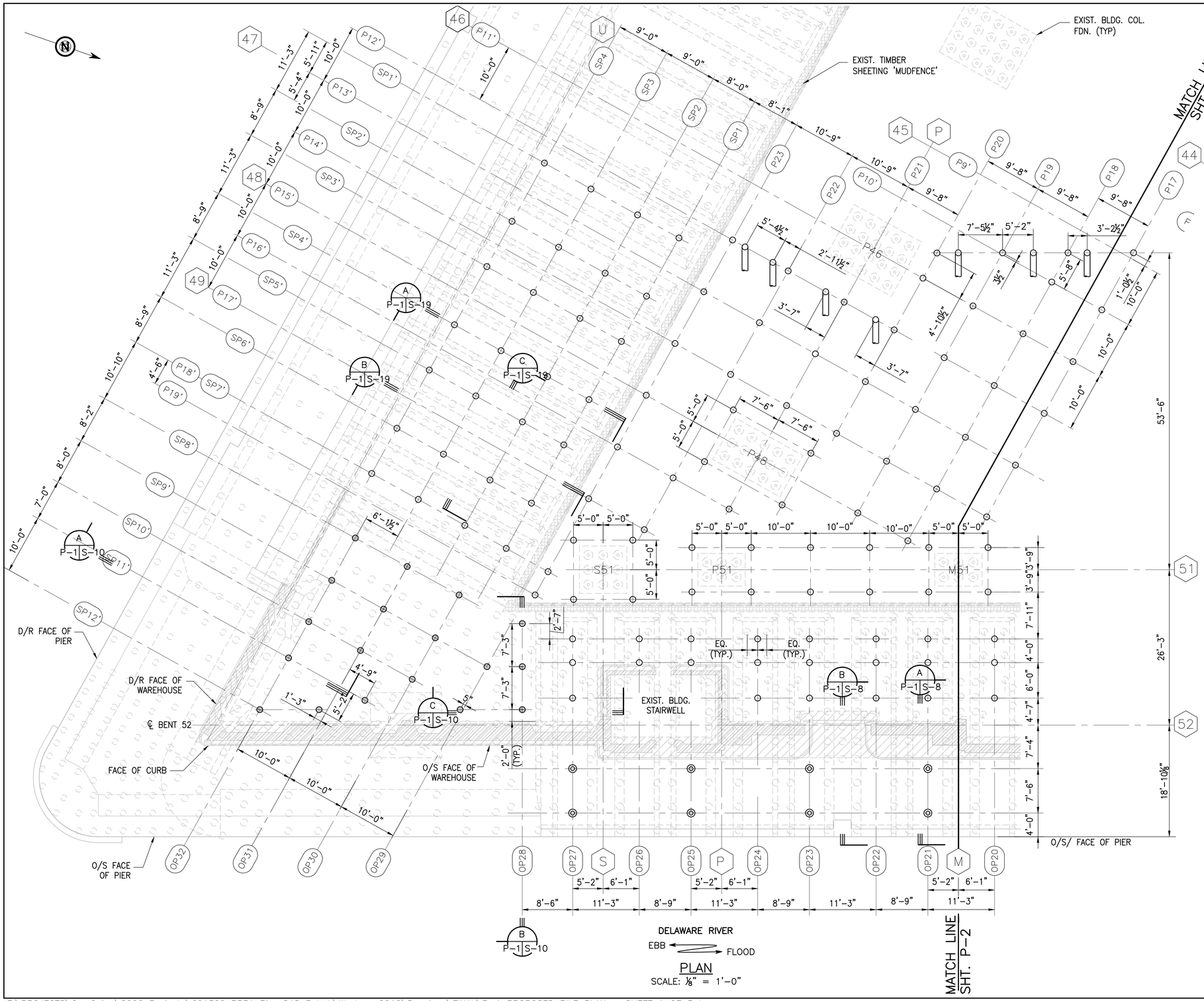

PLAN
SCALE: ⅛" = 1'-0"

ISSUED FOR BID
DATE: 09/01/16

LEGEND:

- EXIST. TIMBER PLUMB PILE
- EXIST. TIMBER SPUR PILE
- EXIST. CONCRETE PILE
- NEW PLUMB MICROPILE (TYPE H)
- NEW BATTER MICROPILE (TYPE H)
- NEW MICROPILE (TYPE L)
- NEW 16"x0.5" STEEL PIPE PILE
- (P#) NEW INTERIOR PILE COLUMN/ROW NUMBER
- (SP#) NEW SOUTHSIDE APRON PILE COLUMN/ROW NUMBER
- (OP#) NEW OUTSHORE PILE COLUMN/ROW NUMBER
- (x) BUILDING COLUMN/ROW NUMBER
- EXISTING
- NEW

NOTES:

1. FOR GENERAL NOTES, SEE DWGS. GN-1 & GN-2.
2. ALL PILES SHALL BE DRIVEN TO ACHIEVE THE REQUIRED CAPACITIES LISTED ON DWG. GN-2 CRITERIA SHALL BE DETERMINED FROM DYNAMIC TESTING IN ACCORDANCE WITH THE SPECIFICATIONS. FOR FURTHER PILE DRIVING, TESTING AND CAPACITY NOTES, SEE DWG. GN-2.
3. FOR MICROPILE NOTES AND DETAILS, SEE DWG. S-13.
4. ALL DIMENSIONS AND ELEVATIONS ARE APPROXIMATE. THE CONTRACTOR SHALL FIELD VERIFY ALL DIMENSIONS AND ELEVATIONS PRIOR TO PROCUREMENT OF MATERIAL.
5. PILES SHALL BE DRIVEN THRU CORES IN THE EXISTING CONCRETE DECK WITHOUT CAUSING DAMAGE TO THE EXISTING STRUCTURE. ANY DAMAGE TO THE EXISTING STRUCTURE SHALL BE REPAIRED BY THE CONTRACTOR AT HIS OWN EXPENSE.
6. NEW PILES HAVE BEEN LOCATED TO AVOID EXISTING TIMBER PILES, AND MAY BE MINIMALLY ADJUSTED, AS NEEDED, WITH THE ENGINEER'S APPROVAL.
7. PILE LOCATIONS ARE SHOWN AT THE CUTOFF ELEVATION OF EACH PILE.

REV.	DESCRIPTION	BY	DATE
1	ISSUED FOR BID	MGW	09/01/16

PHILADELPHIA, PA
PRPA
PIER 84 SOUTH

PROPOSED PILE PLAN – SHEET 1 OF 3

URBAN ENGINEERS, INC.
PORTS & WATERWAYS DIVISION
530 WALNUT STREET
PHILADELPHIA, PA. 19106-3685
PHONE (215) 922-8080 FAX (215) 922-8082

DRAWN BY: VKW/PB
DESIGNED BY: MGW/PB
APPROVED BY: MGW
PROJECT NO: 16-126.1
DATE: 11/19/10
SHEET 17 OF 38

P-1

SEAL: COMMONWEALTH OF PENNSYLVANIA REGISTERED PROFESSIONAL ENGINEER Michael G. Wagner No. PE071324
BY:
DATE:

T:\PROJECTS\On-Going\2006 Projects\601300 PRPA Pier 84S Rehab\Work – 2010\Drawings\FINAL\P-1 PROPOSED PILE PLAN – SHEET 1 OF 3.dwg

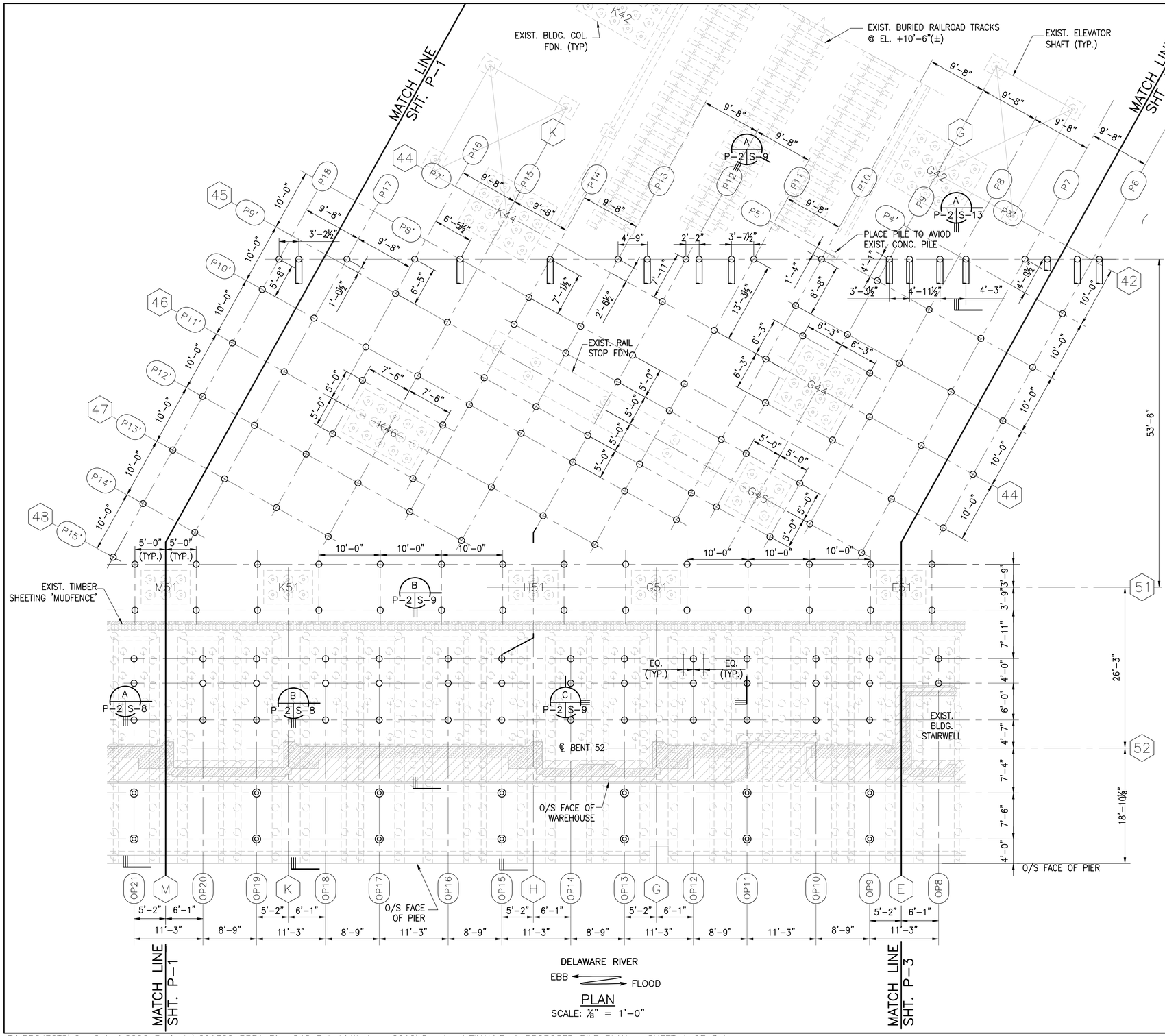

PLAN
SCALE: 1/8" = 1'-0"

ISSUED FOR BID
DATE: 09/01/16

LEGEND:

- EXIST. TIMBER PLUMB PILE
- EXIST. TIMBER SPUR PILE
- EXIST. CONCRETE PILE
- NEW PLUMB MICROPILE (TYPE H)
- NEW BATTER MICROPILE (TYPE H)
- NEW MICROPILE (TYPE L)
- NEW 16"x0.5" STEEL PIPE PILE
- (P#) NEW INTERIOR PILE COLUMN/ROW NUMBER
- (NP#) NEW NORTHSIDE APRON PILE COLUMN/ROW NUMBER
- (SP#) NEW SOUTHSIDE APRON PILE COLUMN/ROW NUMBER
- (OP#) NEW OUTSHORE PILE COLUMN/ROW NUMBER
- (X) BUILDING COLUMN/ROW NUMBER
- EXISTING
- NEW

NOTES:

1. FOR GENERAL NOTES, SEE DWGS. GN-1 & GN-2.
2. ALL PILES SHALL BE DRIVEN TO ACHIEVE THE REQUIRED CAPACITIES LISTED ON DWG. GN-2 CRITERIA SHALL BE DETERMINED FROM DYNAMIC TESTING IN ACCORDANCE WITH THE SPECIFICATIONS. FOR FURTHER PILE DRIVING, TESTING AND CAPACITY NOTES, SEE DWG. GN-2.
3. FOR MICROPILE NOTES AND DETAILS, SEE DWG. S-13.
4. ALL DIMENSIONS AND ELEVATIONS ARE APPROXIMATE. THE CONTRACTOR SHALL FIELD VERIFY ALL DIMENSIONS AND ELEVATIONS PRIOR TO PROCUREMENT OF MATERIAL.
5. PILES SHALL BE DRIVEN THRU CORES IN THE EXISTING CONCRETE DECK WITHOUT CAUSING DAMAGE TO THE EXISTING STRUCTURE. ANY DAMAGE TO THE EXISTING STRUCTURE SHALL BE REPAIRED BY THE CONTRACTOR AT HIS OWN EXPENSE.
6. NEW PILES HAVE BEEN LOCATED TO AVOID EXISTING TIMBER PILES, AND MAY BE MINIMALLY ADJUSTED, AS NEEDED, WITH THE ENGINEER'S APPROVAL.
7. PILE LOCATIONS ARE SHOWN AT THE CUTOFF ELEVATION OF EACH PILE.

REV.	DESCRIPTION	BY	DATE
1	ISSUED FOR BID	MGW	09/01/16

PHILADELPHIA, PA

PIER 84 SOUTH

PROPOSED PILE PLAN – SHEET 2 OF 3

PRPA

URBAN ENGINEERS, INC.
PORTS & WATERWAYS DIVISION
530 WALNUT STREET
PHILADELPHIA, PA. 19106-3685
PHONE (215) 922-8080 FAX (215) 922-8082

DESIGNED BY: MGW/PB
DRAWN BY: VKW/PB
APPROVED BY: MGW
PROJECT NO: 16-126.1

DATE: 11/19/10

SHEET 18 OF 38

P-2

SEAL: COMMONWEALTH OF PENNSYLVANIA REGISTERED PROFESSIONAL ENGINEER Michael G. Wagner No. PE071324

BY: _____
DATE: _____

T:\PROJECTS\On-Going\2006 Projects\601300 PRPA Pier 84S Rehab\Work – 2010\Drawings\FINAL\P-1 PROPOSED PILE PLAN – SHEET 1 OF 3.dwg

PLAN
SCALE: 1/8" = 1'-0"

ISSUED FOR BID
DATE: 09/01/16

LEGEND:

- EXIST. TIMBER PLUMB PILE
- EXIST. TIMBER SPUR PILE
- EXIST. CONCRETE PILE
- EXIST. 12.75"x0.5" STEEL PIPE PILE
- NEW PLUMB MICROPILE (TYPE H)
- NEW BATTER MICROPILE (TYPE H)
- NEW MICROPILE (TYPE L)
- NEW MICROPILE (TYPE L/H)
- NEW 12.75"x0.5" STEEL PIPE PILE
- NEW 16"x0.5" STEEL PIPE PLUMB PILE
- NEW 16"x0.5" STEEL PIPE PLUMB PILE (TYPE U)
- NEW 16"x0.75" STEEL PIPE BATTER PILE
- (P#) NEW INTERIOR PILE COLUMN/ROW NUMBER
- (NP#) NEW NORTHSIDE APRON PILE COLUMN/ROW NUMBER
- (OP#) NEW OUTSHORE PILE COLUMN/ROW NUMBER
- (x) BUILDING COLUMN/ROW NUMBER
- EXISTING
- NEW

NOTES:

1. FOR GENERAL NOTES, SEE DWGS. GN-1 & GN-2.
2. ALL PILES SHALL BE DRIVEN TO ACHIEVE THE REQUIRED CAPACITIES LISTED ON DWG. GN-2 CRITERIA SHALL BE DETERMINED FROM DYNAMIC TESTING IN ACCORDANCE WITH THE SPECIFICATIONS. FOR FURTHER PILE DRIVING, TESTING AND CAPACITY NOTES, SEE DWG. GN-2.
3. FOR MICROPILE NOTES AND DETAILS, SEE DWG. S-13.
4. ALL DIMENSIONS AND ELEVATIONS ARE APPROXIMATE. THE CONTRACTOR SHALL FIELD VERIFY ALL DIMENSIONS AND ELEVATIONS PRIOR TO PROCUREMENT OF MATERIAL.
5. PILES SHALL BE DRIVEN THRU CORES IN THE EXISTING CONCRETE DECK WITHOUT CAUSING DAMAGE TO THE EXISTING STRUCTURE. ANY DAMAGE TO THE EXISTING STRUCTURE SHALL BE REPAIRED BY THE CONTRACTOR AT HIS OWN EXPENSE.
6. NEW PILES HAVE BEEN LOCATED TO AVOID EXISTING TIMBER PILES, AND MAY BE MINIMALLY ADJUSTED, AS NEEDED, WITH THE ENGINEER'S APPROVAL.
7. THE FOUR (4) TYPE "U" PILES SURROUNDING THE NEW BOLLARD ON THE NORTHEAST CORNER SHALL BE LOCATED AS CLOSE AS POSSIBLE TO THE NEW BOLLARD, WHILE AVOIDING INTERFERENCE WITH NEW BATTER PILES AND EXISTING TIMBER PILES.
8. PILE LOCATIONS ARE SHOWN AT THE CUTOFF ELEVATION OF EACH PILE.

REV.	DESCRIPTION	BY	DATE
1	ISSUED FOR BID	MGW	09/01/16

PRPA
PHILADELPHIA,PA
PIER 84 SOUTH
PROPOSED PILE PLAN – SHEET 3 OF 3

URBAN ENGINEERS, INC.
PORTS & WATERWAYS DIVISION
530 WALNUT STREET
PHILADELPHIA, PA. 19106-3685
PHONE (215) 922-8080 FAX (215) 922-8082

DRAWN BY: VKW/PB
DESIGNED BY: MGW/PB
PROJECT NO: 16-126.1
APPROVED BY: MGW

DATE: 11/19/10
SHEET 19 OF 38
P-3

SEAL: COMMONWEALTH OF PENNSYLVANIA REGISTERED PROFESSIONAL ENGINEER Michael G. Wagner No. PE071324
BY: _____
DATE: _____

T:\PROJECTS\On-Going\2006 Projects\601300 PRPA Pier 84S Rehab\Work – 2010\Drawings\FINAL\P-1 PROPOSED PILE PLAN – SHEET 1 OF 3.dwg

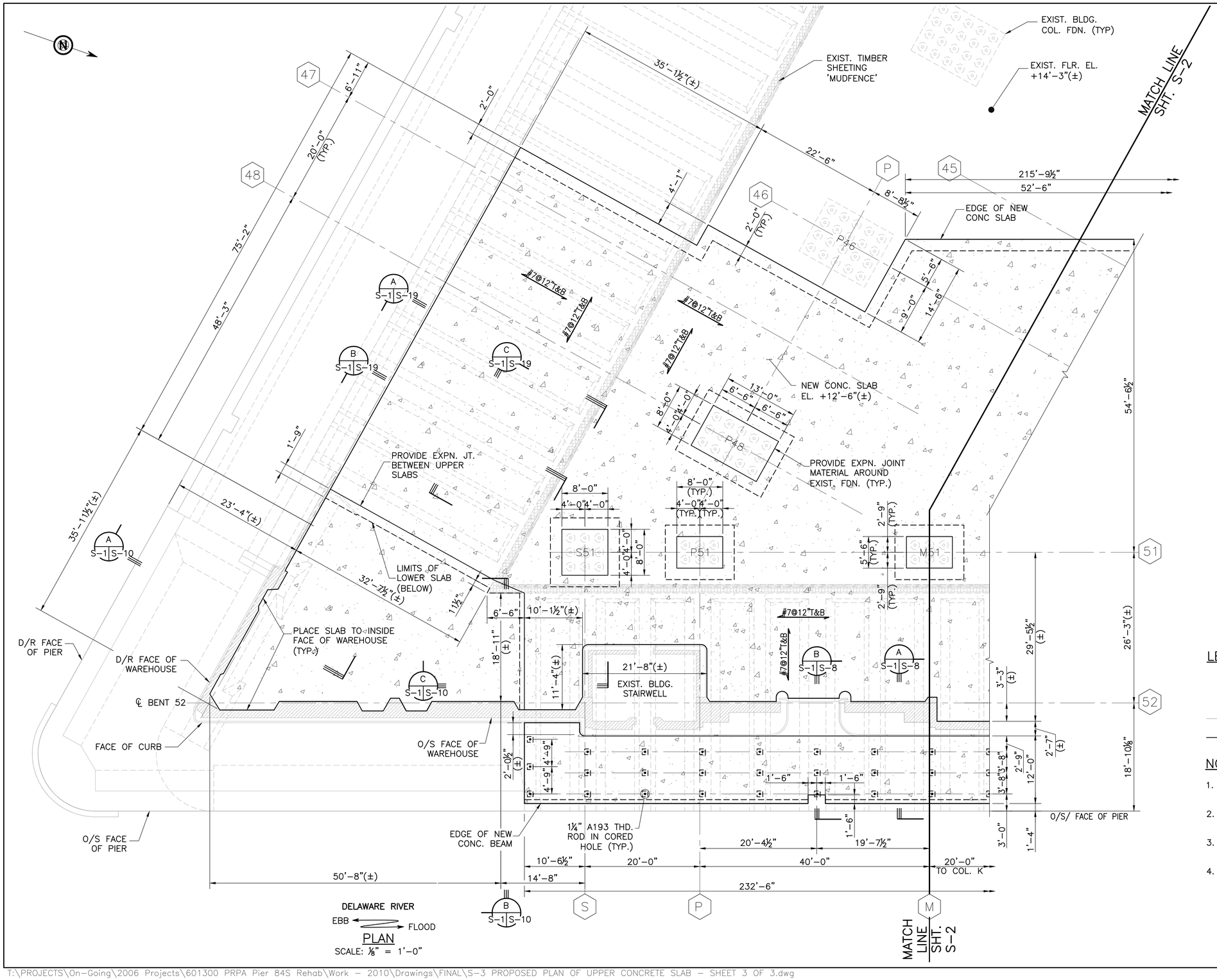

ISSUED FOR BID
DATE: 09/01/16

LEGEND:

- (x) BUILDING COLUMN/ROW NUMBER
- EXISTING
- NEW

NOTES:

1. FOR GENERAL NOTES, SEE DWGS. GN-1 & GN-2.
2. FOR DETAILS OF LOWER SLAB, SEE DWG. S-4.
3. FOR DETAILS OF OUTSHORE BEAM, SEE DWGS S-7 AND S-8.
4. NOTE THAT FILL BELOW THE PROPOSED UPPER DECK SLAB INSIDE OF THE TIMBER SHEETING MAY HAVE SETTLED. THE CONTRACTOR MAY CHOOSE TO REPLACE FILL IN ORDER TO POUR THE NEW SLAB ON GRADE, OR TO PROVIDE STIFF, SELF-SUPPORTING FORMWORK TO REMAIN IN PLACE.

REV.	DESCRIPTION	BY	DATE
1	ISSUED FOR BID	MGW	09/01/16

PHILADELPHIA, PA

PIER 84 SOUTH

PRPA

PROPOSED PLAN OF UPPER CONCRETE SLAB – SHEET 1 OF 3

URBAN ENGINEERS, INC.
PORTS & WATERWAYS DIVISION
530 WALNUT STREET
PHILADELPHIA, PA. 19106-3685
PHONE (215) 922-8080 FAX (215) 922-8082

DRAWN BY: VKW/PB
DESIGNED BY: MGW/PB
PROJECT NO: 16-126.1
APPROVED BY: MGW

DATE: 11/19/10

SHEET 20 OF 38

S-1

SEAL: COMMONWEALTH OF PENNSYLVANIA REGISTERED PROFESSIONAL ENGINEER Michael G. Wagner No. PE071324

BY: _____
DATE: _____

T:\PROJECTS\On-Going\2006 Projects\601300 PRPA Pier 84S Rehab\Work – 2010\Drawings\FINAL\S-3 PROPOSED PLAN OF UPPER CONCRETE SLAB – SHEET 3 OF 3.dwg

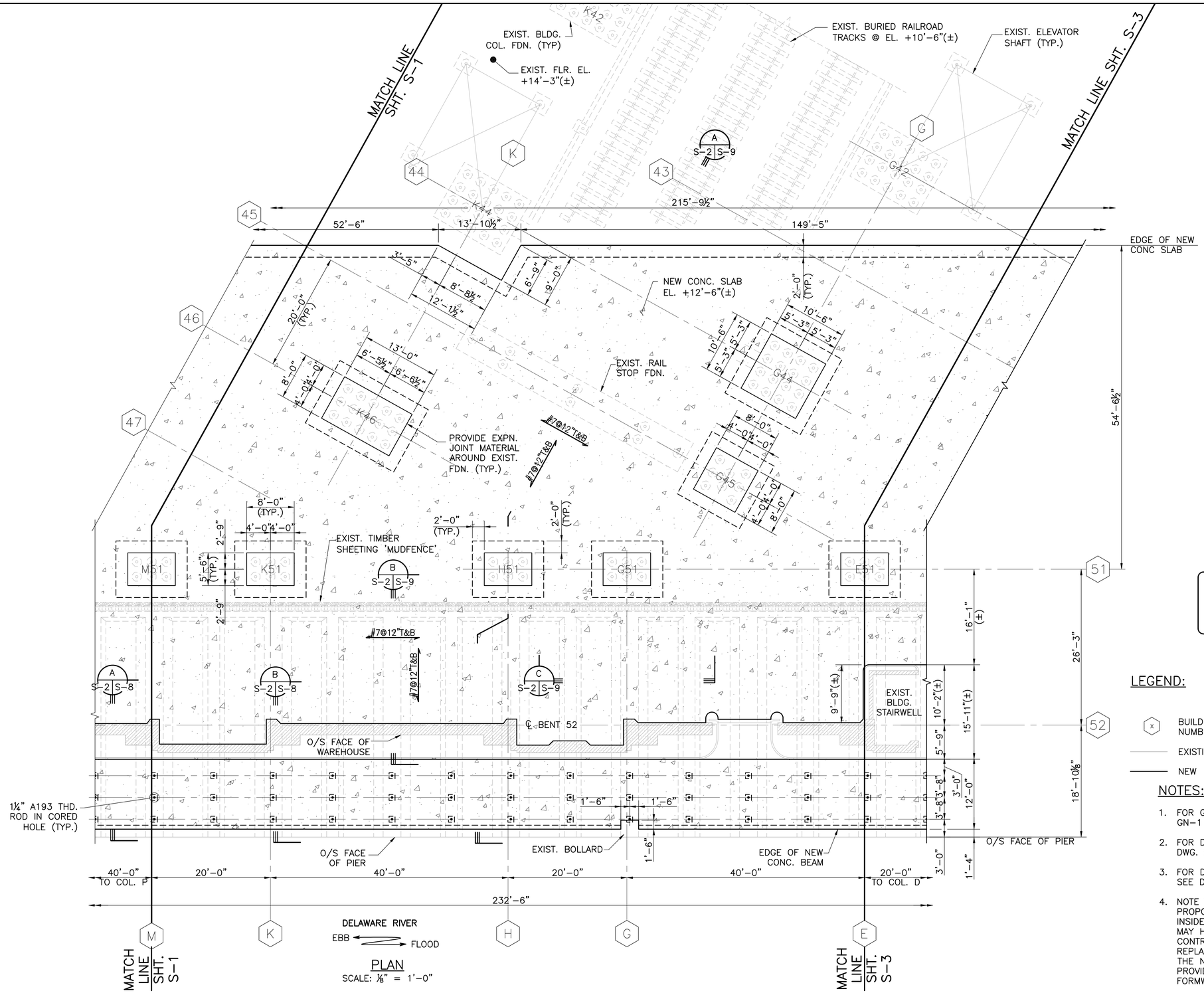

PLAN
SCALE: ⅛" = 1'-0"

ISSUED FOR BID
DATE: 09/01/16

LEGEND:

- (x) BUILDING COLUMN/ROW NUMBER
- EXISTING
- NEW

NOTES:

1. FOR GENERAL NOTES, SEE DWGS. GN-1 & GN-2.
2. FOR DETAILS OF LOWER SLAB, SEE DWG. S-4.
3. FOR DETAILS OF OUTSHORE BEAM, SEE DWGS S-7 AND S-8.
4. NOTE THAT FILL BELOW THE PROPOSED UPPER DECK SLAB INSIDE OF THE TIMBER SHEETING MAY HAVE SETTLED. THE CONTRACTOR MAY CHOOSE TO REPLACE FILL IN ORDER TO POUR THE NEW SLAB ON GRADE, OR TO PROVIDE STIFF, SELF-SUPPORTING FORMWORK TO REMAIN IN PLACE.

REV.	DESCRIPTION	BY	DATE
1	ISSUED FOR BID	MGW	09/01/16

PHILADELPHIA,PA
PRPA
PIER 84 SOUTH

PROPOSED PLAN OF UPPER CONCRETE SLAB – SHEET 2 OF 3

URBAN ENGINEERS, INC.
PORTS & WATERWAYS DIVISION
530 WALNUT STREET
PHILADELPHIA, PA. 19106-3685
PHONE (215) 922-8080 FAX (215) 922-8082

DESIGNED BY: MGW/PB
DRAWN BY: VKW/PB
APPROVED BY: MGW
PROJECT NO: 16-126.1
DATE: 11/19/10
SHEET 21 OF 38

S-2

SEAL: COMMONWEALTH OF PENNSYLVANIA REGISTERED PROFESSIONAL ENGINEER Michael G. Wagner No. PE071324
BY:
DATE:

T:\PROJECTS\On-Going\2006 Projects\601300 PRPA Pier 84S Rehab\Work – 2010\Drawings\FINAL\S-3 PROPOSED PLAN OF UPPER CONCRETE SLAB – SHEET 3 OF 3.dwg

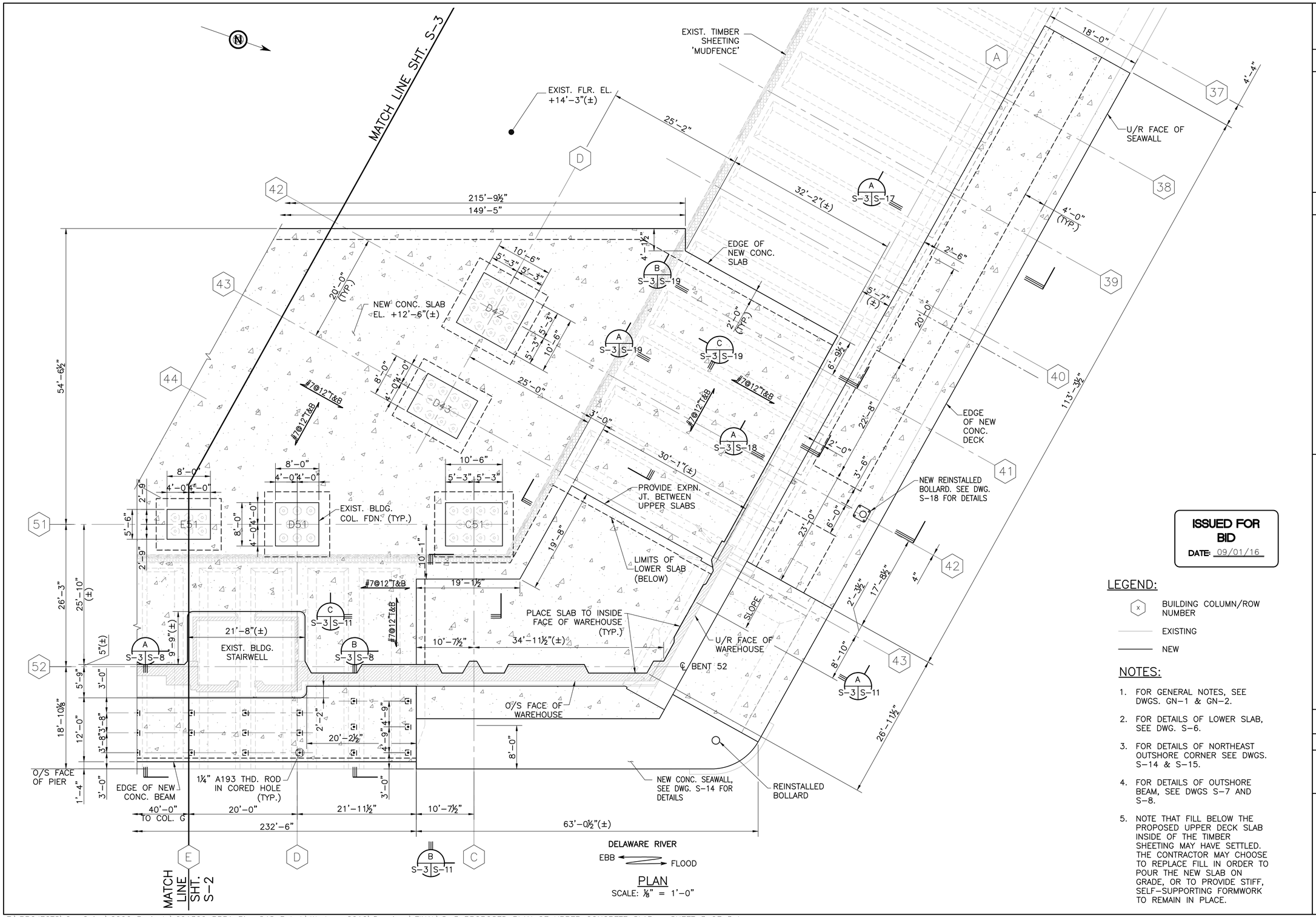

PLAN
SCALE: ⅛" = 1'-0"

ISSUED FOR BID
DATE: 09/01/16

LEGEND:

- (x) BUILDING COLUMN/ROW NUMBER
- EXISTING
- NEW

NOTES:

1. FOR GENERAL NOTES, SEE DWGS. GN-1 & GN-2.
2. FOR DETAILS OF LOWER SLAB, SEE DWG. S-6.
3. FOR DETAILS OF NORTHEAST OUTSHORE CORNER SEE DWGS. S-14 & S-15.
4. FOR DETAILS OF OUTSHORE BEAM, SEE DWGS S-7 AND S-8.
5. NOTE THAT FILL BELOW THE PROPOSED UPPER DECK SLAB INSIDE OF THE TIMBER SHEETING MAY HAVE SETTLED. THE CONTRACTOR MAY CHOOSE TO REPLACE FILL IN ORDER TO POUR THE NEW SLAB ON GRADE, OR TO PROVIDE STIFF, SELF-SUPPORTING FORMWORK TO REMAIN IN PLACE.

REV.	DESCRIPTION	BY	DATE
1	ISSUED FOR BID	MGW	09/01/16

PRPA — PHILADELPHIA,PA

PIER 84 SOUTH

PROPOSED PLAN OF UPPER CONCRETE SLAB – SHEET 3 OF 3

URBAN ENGINEERS, INC.
PORTS & WATERWAYS DIVISION
530 WALNUT STREET
PHILADELPHIA, PA. 19106-3685
PHONE (215) 922-8080 FAX (215) 922-8082

DRAWN BY: VKW/PB
DESIGNED BY: MGW/PB
PROJECT NO: 16-126.1
APPROVED BY: MGW

DATE: 11/19/10

SHEET 22 OF 38

S-3

SEAL: COMMONWEALTH OF PENNSYLVANIA — REGISTERED PROFESSIONAL ENGINEER — Michael G. Wagner — No. PE071324

BY: _____
DATE: _____

T:\PROJECTS\On-Going\2006 Projects\601300 PRPA Pier 84S Rehab\Work – 2010\Drawings\FINAL\S-3 PROPOSED PLAN OF UPPER CONCRETE SLAB – SHEET 3 OF 3.dwg

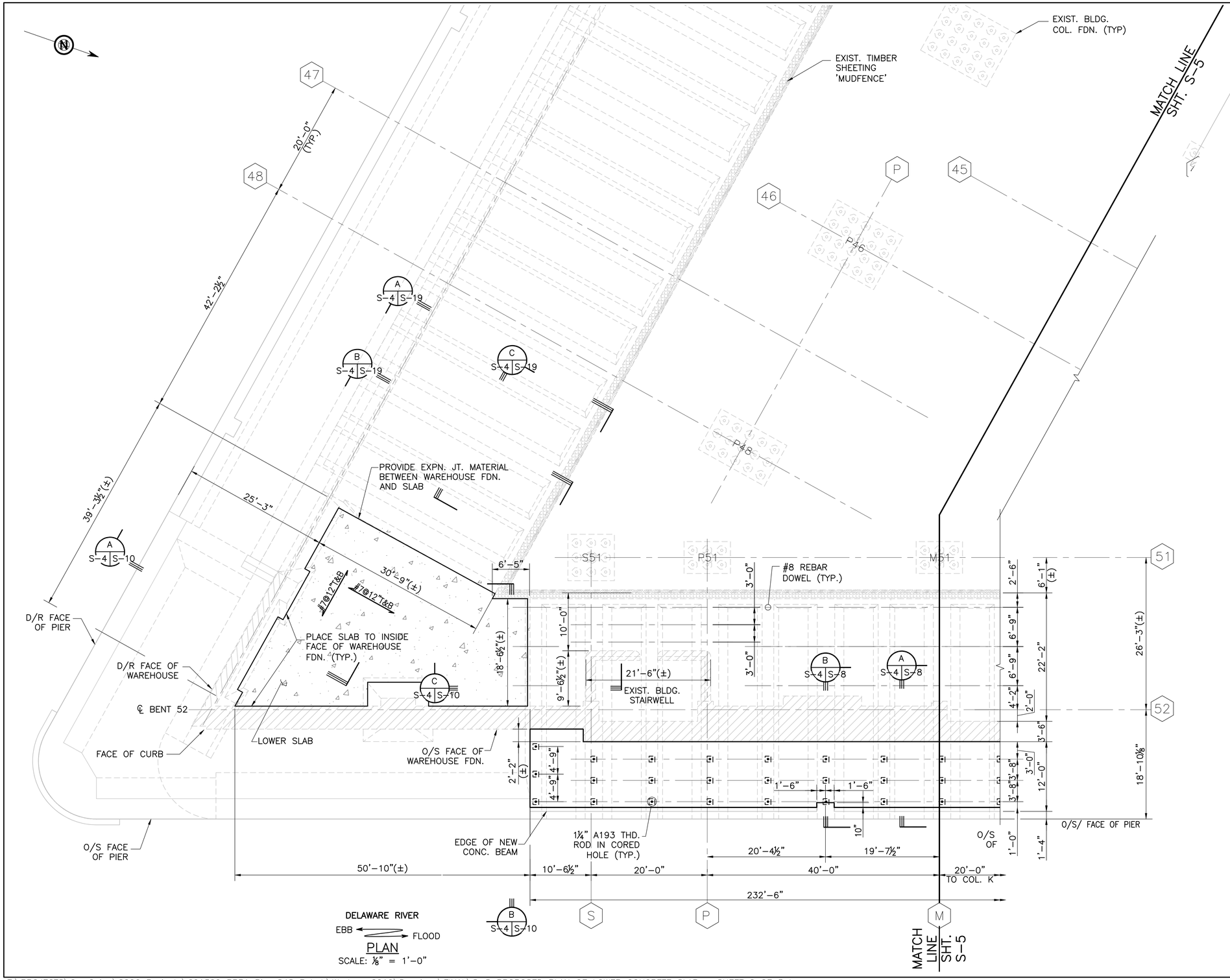

ISSUED FOR BID
DATE: 09/01/16

LEGEND:

- (x) BUILDING COLUMN/ROW NUMBER
- EXISTING
- NEW

NOTES:

1. FOR GENERAL NOTES, SEE DWGS. GN-1 & GN-2.
2. FOR DETAILS OF UPPER SLAB, SEE DWG. S-1.
3. FOR DETAILS OF OUTSHORE BEAM, SEE DWGS S-7 AND S-8.

REV.	DESCRIPTION	BY	DATE
1	ISSUED FOR BID	MGW	09/01/16

PHILADELPHIA,PA

PIER 84 SOUTH

PRPA

PROPOSED PLAN OF LOWER CONCRETE SLAB – SHEET 1 OF 3

URBAN ENGINEERS, INC.
PORTS & WATERWAYS DIVISION
530 WALNUT STREET
PHILADELPHIA, PA. 19106-3685
PHONE (215) 922-8080 FAX (215) 922-8082

DRAWN BY: VKW/PB
DESIGNED BY: MGW/PB
PROJECT NO: 16-126.1
APPROVED BY: MGW

DATE: 11/19/10

SHEET 23 OF 38

S-4

SEAL: COMMONWEALTH OF PENNSYLVANIA REGISTERED PROFESSIONAL ENGINEER Michael G. Wagner No. PE071324

BY: _____

DATE: _____

T:\PROJECTS\On-Going\2006 Projects\601300 PRPA Pier 84S Rehab\Work – 2010\Drawings\FINAL\S-5 PROPOSED PLAN OF LOWER CONCRETE SLAB – SHEET 2 OF 3.dwg

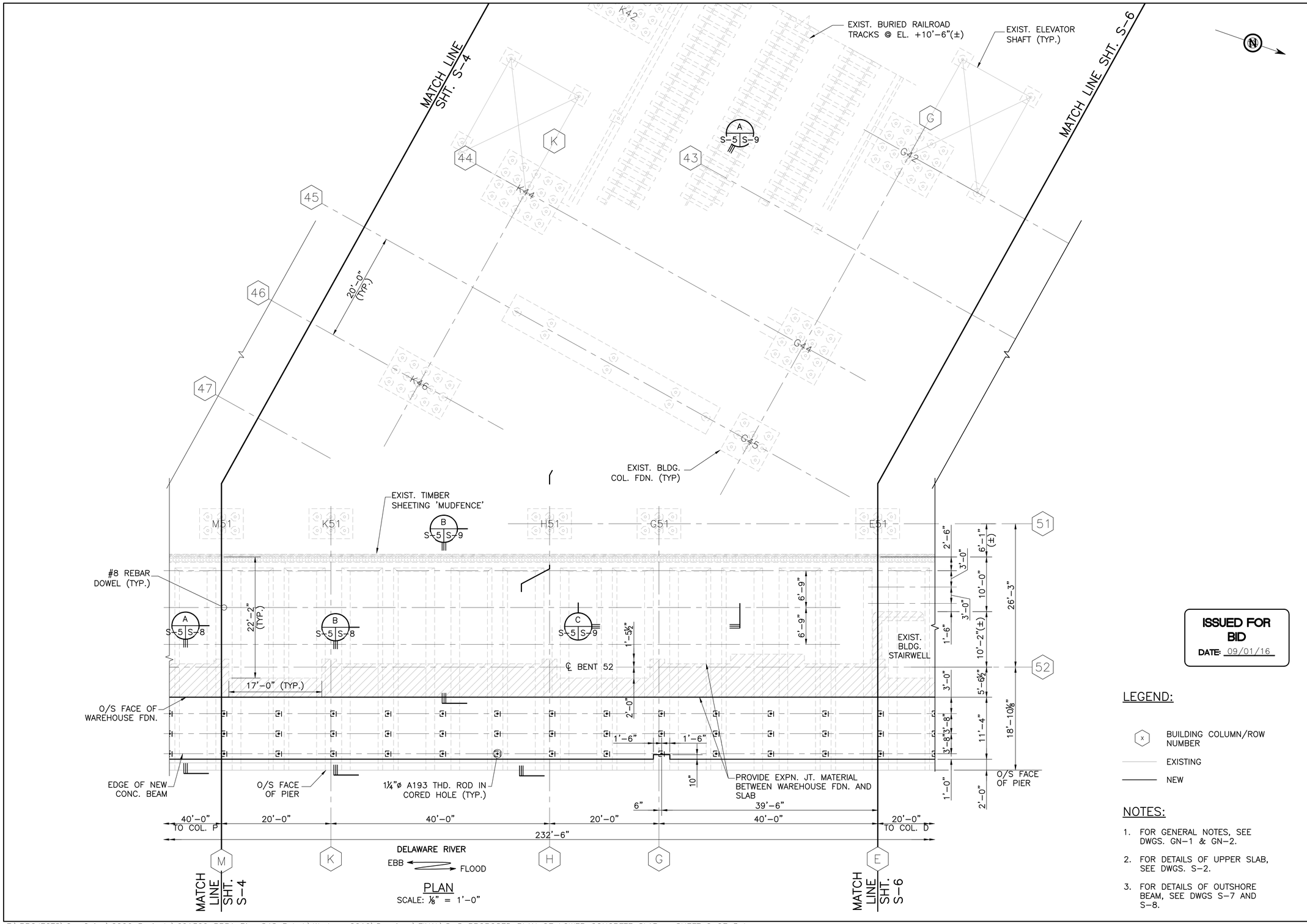

ISSUED FOR BID
DATE: 09/01/16

LEGEND:

- (x) BUILDING COLUMN/ROW NUMBER
- EXISTING
- NEW

NOTES:

1. FOR GENERAL NOTES, SEE DWGS. GN-1 & GN-2.
2. FOR DETAILS OF UPPER SLAB, SEE DWGS. S-2.
3. FOR DETAILS OF OUTSHORE BEAM, SEE DWGS S-7 AND S-8.

REV.	DESCRIPTION	BY	DATE
1	ISSUED FOR BID	MGW	09/01/16

PHILADELPHIA,PA

PIER 84 SOUTH

PRPA

PROPOSED PLAN OF LOWER CONCRETE SLAB – SHEET 2 OF 3

URBAN ENGINEERS, INC.
PORTS & WATERWAYS DIVISION
530 WALNUT STREET
PHILADELPHIA, PA. 19106-3685
PHONE (215) 922-8080 FAX (215) 922-8082

DRAWN BY: VKW/PB
DESIGNED BY: MGW/PB
PROJECT NO: 16-126.1
APPROVED BY: MGW

DATE: 11/19/10

SHEET 24 OF 38

S-5

SEAL: COMMONWEALTH OF PENNSYLVANIA REGISTERED PROFESSIONAL ENGINEER Michael G. Wagner No. PE071324

BY: _____

DATE: _____

T:\PROJECTS\On-Going\2006 Projects\601300 PRPA Pier 84S Rehab\Work – 2010\Drawings\FINAL\S-5 PROPOSED PLAN OF LOWER CONCRETE SLAB – SHEET 2 OF 3.dwg

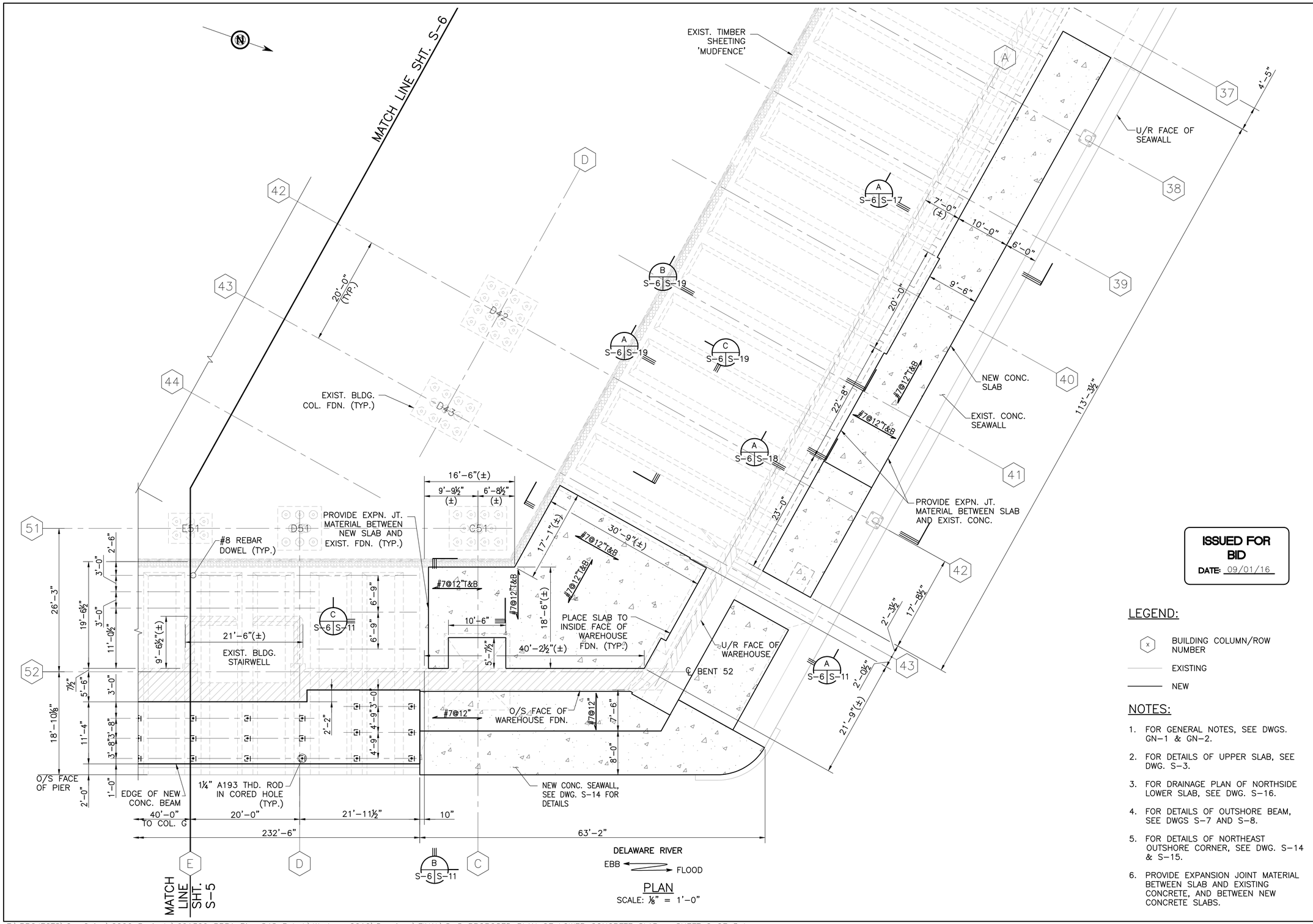

PLAN
SCALE: ⅛" = 1'-0"

ISSUED FOR BID
DATE: 09/01/16

LEGEND:

- (x) BUILDING COLUMN/ROW NUMBER
- EXISTING
- NEW

NOTES:

1. FOR GENERAL NOTES, SEE DWGS. GN-1 & GN-2.
2. FOR DETAILS OF UPPER SLAB, SEE DWG. S-3.
3. FOR DRAINAGE PLAN OF NORTHSIDE LOWER SLAB, SEE DWG. S-16.
4. FOR DETAILS OF OUTSHORE BEAM, SEE DWGS S-7 AND S-8.
5. FOR DETAILS OF NORTHEAST OUTSHORE CORNER, SEE DWG. S-14 & S-15.
6. PROVIDE EXPANSION JOINT MATERIAL BETWEEN SLAB AND EXISTING CONCRETE, AND BETWEEN NEW CONCRETE SLABS.

REV.	DESCRIPTION	BY	DATE
1	ISSUED FOR BID	MGW	09/01/16

PRPA — PHILADELPHIA, PA

PIER 84 SOUTH

PROPOSED PLAN OF LOWER CONCRETE SLAB – SHEET 3 OF 3

URBAN ENGINEERS, INC.
PORTS & WATERWAYS DIVISION
530 WALNUT STREET
PHILADELPHIA, PA. 19106-3685
PHONE (215) 922-8080 FAX (215) 922-8082

DRAWN BY: VKW/PB
DESIGNED BY: MGW/PB
PROJECT NO: 16-126.1
APPROVED BY: MGW

DATE: 11/19/10

SHEET 25 OF 38

S-6

SEAL: COMMONWEALTH OF PENNSYLVANIA — REGISTERED PROFESSIONAL ENGINEER — Michael G. Wagner — No. PE071324

BY: _____
DATE: _____

T:\PROJECTS\On-Going\2006 Projects\601300 PRPA Pier 84S Rehab\Work – 2010\Drawings\FINAL\S-5 PROPOSED PLAN OF LOWER CONCRETE SLAB – SHEET 2 OF 3.dwg

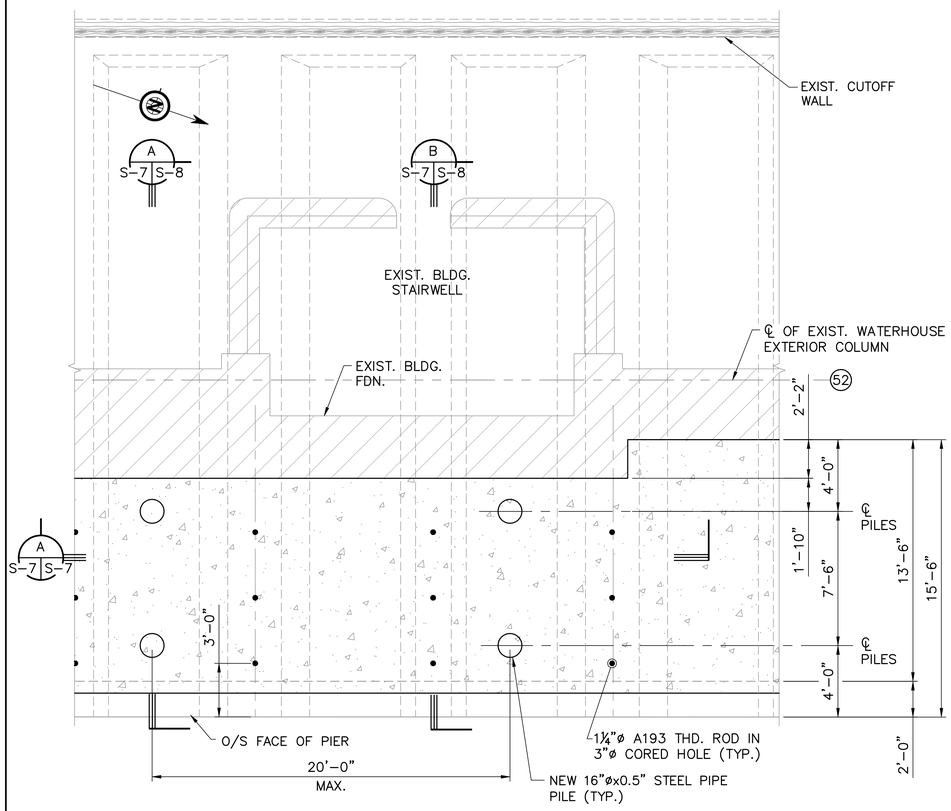

PLAN
SCALE: ¼" = 1'-0"

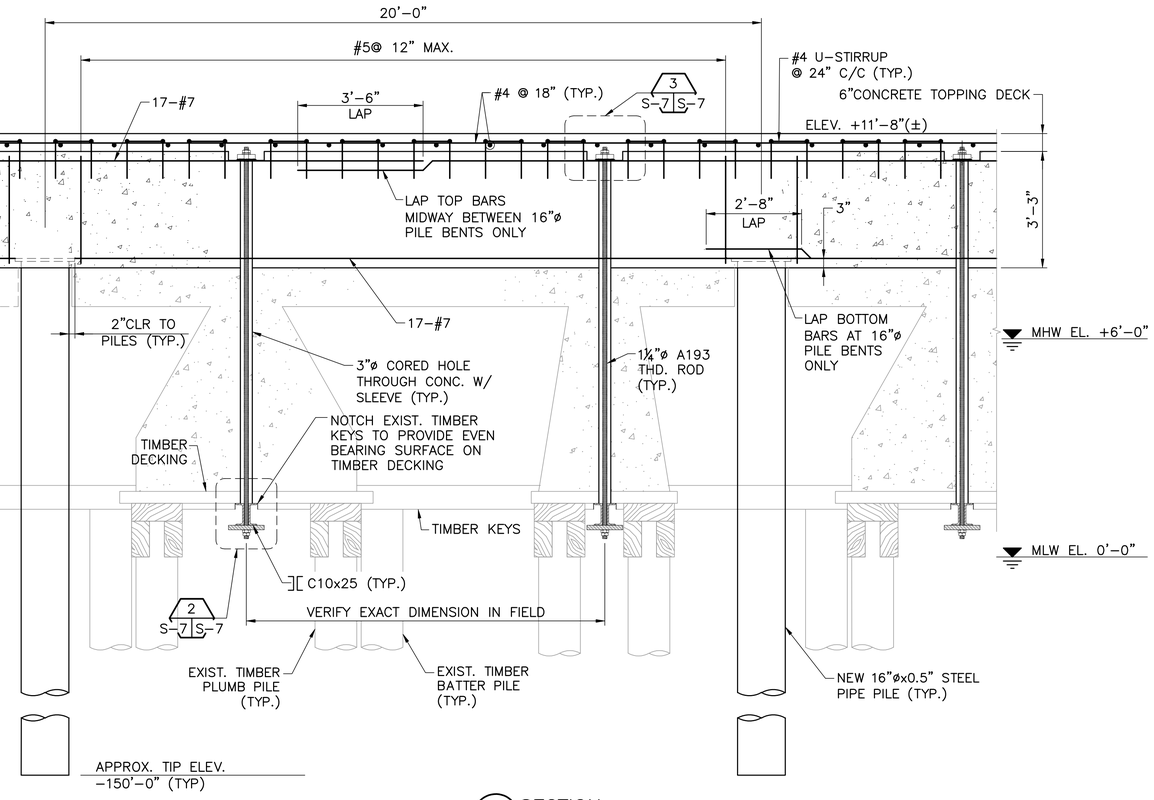

A SECTION
S-7 S-7 SCALE: 1/2" = 1'-0"

LEGEND:

EXISTING

NEW

NOTES:

1. FOR GENERAL NOTES, SEE DWGS. GN-1 & GN-2.
2. REFER TO SHEETS P-1 THRU P-3 FOR PILE LOCATIONS.
3. REFER TO SHEETS S-1 THRU S-3 FOR CONC. BEAM LOCATION.
4. REMOVE EXISTING ASPHALT PAVING AND FILL REQUIRED TO PLACE NEW CONCRETE BEAM.
5. PLACE NEW STEEL PILES TO AVOID INTERFERENCE WITH EXISTING TIMBER BATTER PILES.
6. FOR CONCRETE TOPPING DECK SECTION, SEE SHEET S-8.
7. REBAR CLEAR COVER SHALL BE 3 INCHES TYP., U.N.O.
8. ALL STRUCTURAL STEEL FOR THE HANGER ASSEMBLY SHALL BE HOT DIP GALVANIZED AFTER SHOP WELDING OF STIFFENER PLATES. THREADED HANGER RODS SHALL BE ASTM A193 GR. B8M, WITH NUTS CONFORMING TO ASTM A194 GR. 8M. WASHERS SHALL BE STAINLESS STEEL 316.
9. THE CONTRACTOR TO VERIFY CENTERLINE OF EXISTING BENTS TO PLACE CHANNELS BETWEEN EXISTING TIMBER PILES.

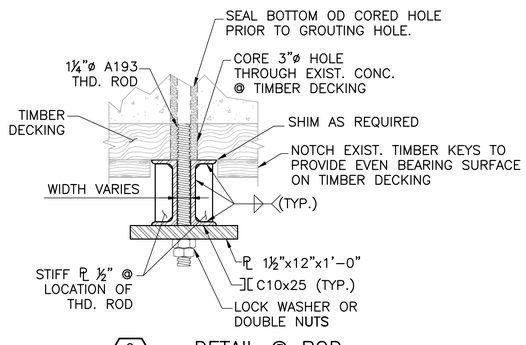

2 S-7 S-7 DETAIL @ ROD
SCALE: 1 1/2" = 1'-0"

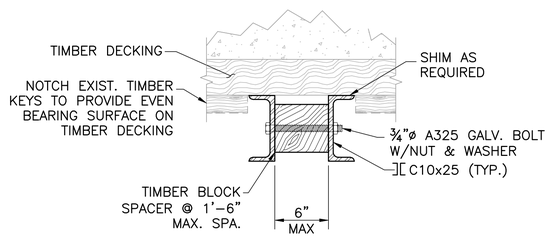

2 S-7 S-7 DETAIL @ SPACER
SCALE: 1 1/2" = 1'-0"

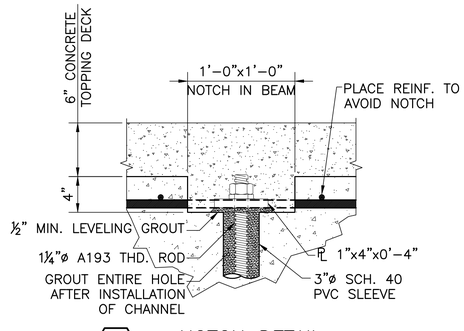

3 S-7 S-7 NOTCH DETAIL
SCALE: 1 1/2" = 1'-0"

ISSUED FOR BID
DATE: 09/01/16

REV.	DESCRIPTION	BY	DATE
1	ISSUED FOR BID	MGW	09/01/16

PRPA — PHILADELPHIA, PA

PIER 84 SOUTH

SEAWALL REINFORCEMENT BEAM DETAILS

URBAN ENGINEERS, INC.
PORTS & WATERWAYS DIVISION
530 WALNUT STREET
PHILADELPHIA, PA. 19106-3685
PHONE (215) 922-8080 FAX (215) 922-8082

DRAWN BY: VKW/PB
DESIGNED BY: MGW/PB
PROJECT NO: 16-126.1
APPROVED BY: MGW

DATE: 11/19/10

SHEET 26 OF 38

S-7

SEAL: COMMONWEALTH OF PENNSYLVANIA — REGISTERED PROFESSIONAL ENGINEER — Michael G. Wagner — No. PE071324

BY: _____

DATE: _____

T:\PROJECTS\On-Going\2006 Projects\601300 PRPA Pier 84S Rehab\Work - 2010\Drawings\FINAL\S-7 SEAWALL REINFORCEMENT BEAM DETAILS.dwg

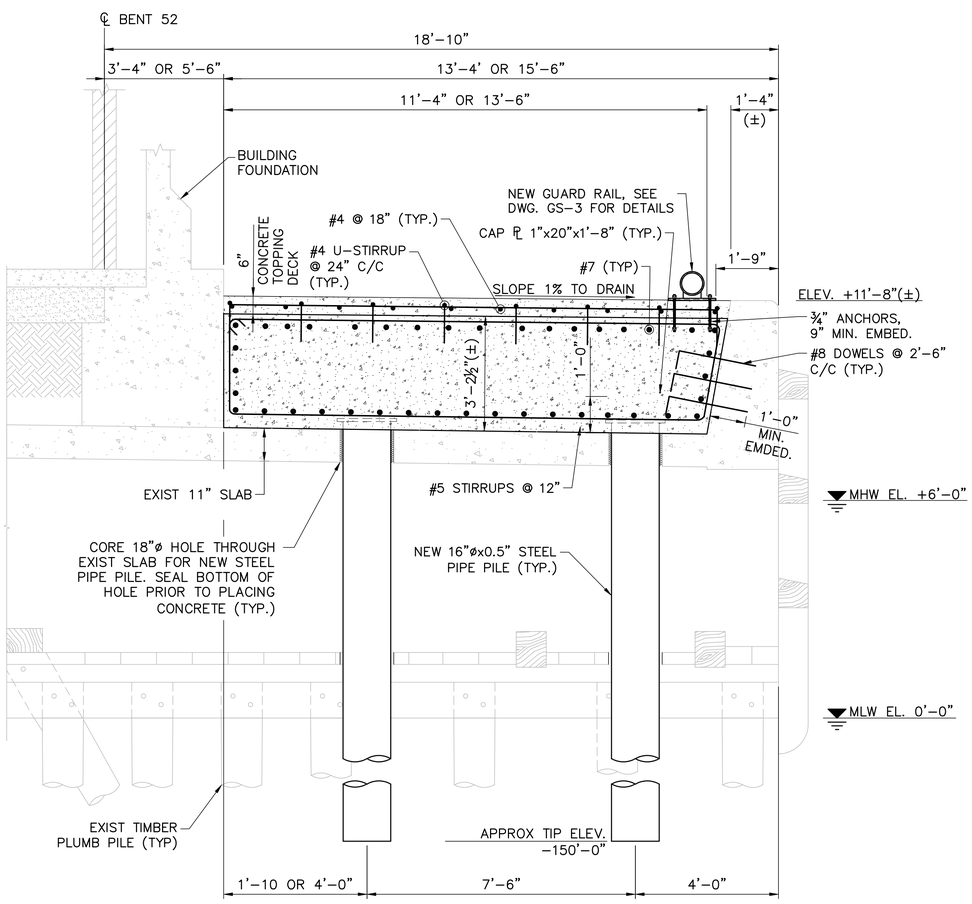

A SECTION

P–1,P–2,P–3,S–1,S–2,S–3,S–7|S–8 SCALE: 1/2" = 1'–0"

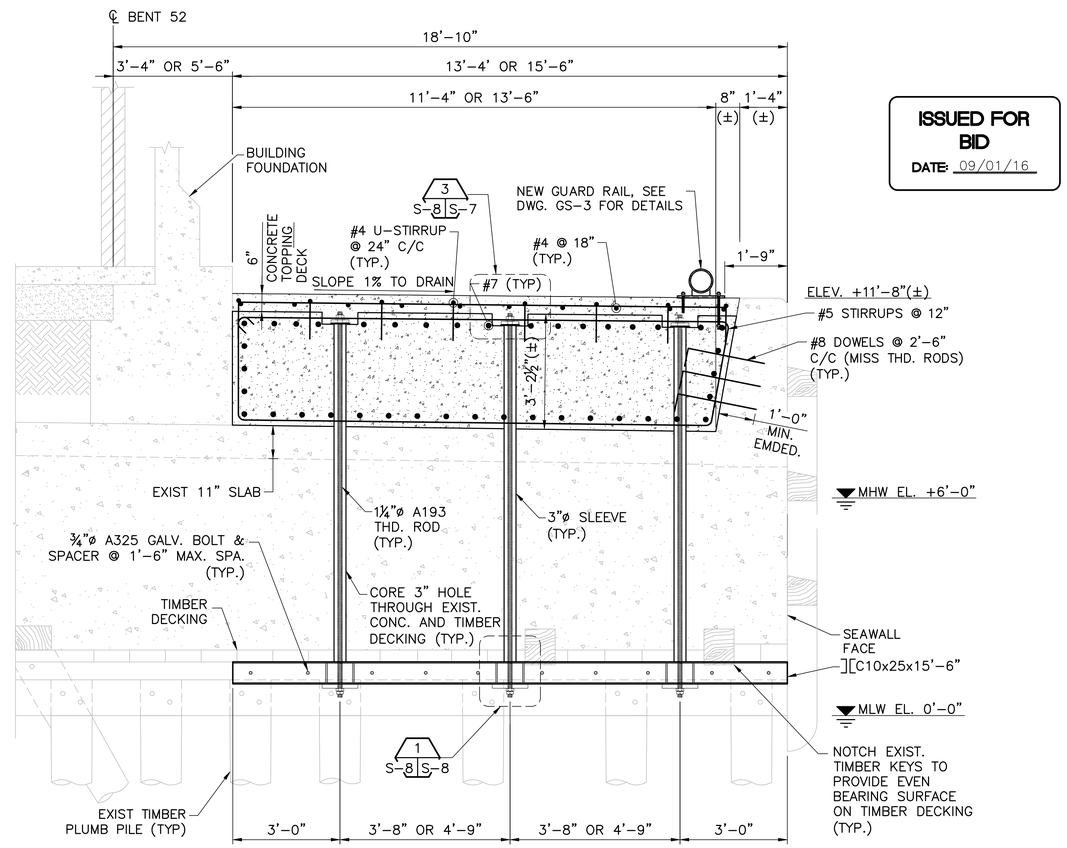

B SECTION

P–1,P–2,P–3,S–1,S–2,S–3,S–7|S–8 SCALE: 1/2" = 1'–0"

3/31/11

ISSUED FOR BID

DATE: 09/01/16

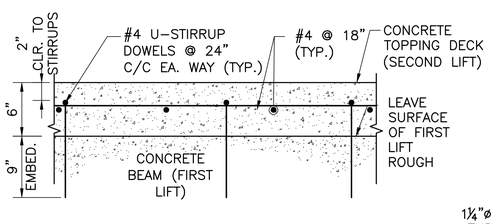

TYPICAL NEW CONCRETE TOPPING DECK SECTION

SCALE: 1½" = 1'–0"

LEGEND:

EXISTING

NEW

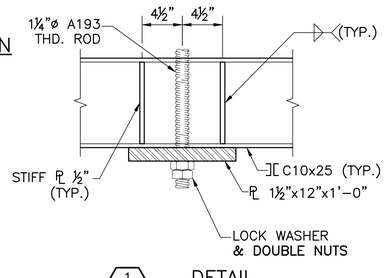

1 DETAIL

S–8|S–8 SCALE: 1 1/2" = 1'–0"

RECOMMENDED* BEAM CONSTRUCTION SEQUENCE:

1. REMOVE EXISTING ASPHALT PAVING AND FILL REQUIRED TO PLACE NEW CONCRETE BEAM.
2. CORE 3" HOLE, FOR THREADED ROD. CORE HOLES FOR PILES AND INSTALL PILES.
3. PLACE REINFORCEMENT FOR THE CONCRETE BEAM, DOWEL–STIRRUPS, AND SLEEVE FOR THE THREADED ROD. TEMPORARILY SUPPORT SLEEVE ABOVE PROPOSED T.O.C. ELEVATION.
4. SEAL BASE OF SLEEVE AND POUR THE CONCRETE BEAM, LEAVING THE TOP SURFACE ROUGH.
5. ONCE CONCRETE HAS REACHED ITS DESIGN STRENGTH, PLACE THREADED RODS WITH TOP PLATE WASHERS, LOCK WASHERS, AND NUTS IN PLACE. SHIM UNDER TOP PLATES TO ALLOW FOR FUTURE GROUT INTO HOLES.
6. INSTALL CHANNELS, LOWER PLATES, WASHERS AND NUTS. TO SECURE BOTTOM NUTS, EITHER INSTALL DOUBLE NUTS BY TIGHTENING AGAINST EACH OTHER, OR USE LOCK WASHERS. NOTCH TIMBER KEYS AS REQUIRED. SHIM AS REQUIRED TO ENSURE BEARING ON TIMBER DECKING.
7. WORKING FROM THE TOP, SNUG TIGHTEN THE NUTS ON THE THREADED RODS, WORKING IN CYCLES, TO PULL EACH CHANNEL INTO FIRM CONTACT WITH THE TIMBER DECKING. DO NOT TENSION THE RODS BEYOND WHAT IS NECESSARY TO PREVENT LOOSENING OF THE NUT.
8. SEAL BOTTOM OF CORED HOLES AND GROUT ENTIRE LENGTH OF HOLE. REMOVE SHIMS UNDER TOP PLATE AFTER GROUT HAS HARDENED, AND GROUT UNDER TOP PLATE WHERE SHIMS WERE LOCATED.
9. POUR THE CONCRETE TOPPING DECK.

* THE CONTRACTOR MAY SUBMIT AN ALTERNATE PROCEDURE FOR APPROVAL.

NOTES:

1. FOR GENERAL NOTES, SEE DWGS. GN–1 & GN–2.
2. REFER TO SHEETS P–1 THRU P–3 FOR PILE LOCATIONS.
3. REFER TO SHEETS S–1 THRU S–3 FOR BEAM LOCATION.
4. PLACE NEW STEEL PILES TO AVOID INTERFERENCE WITH EXISTING TIMBER BATTER PILES.
5. REBAR CLEAR COVER SHALL BE 3 INCH TYP, UNO.
6. CONTRACTOR SHALL PLAN PILE DRIVING OPERATIONS SUCH THAT PILES DO NOT PROJECT MORE THAN 2 FT ABOVE EXIST GRADE WHEN VESSEL BERTHING & UNLOADING/LOADING OPERATIONS ARE SCHEDULED TO OCCUR. IT IS THE CONTRACTOR'S RESPONSIBILITY TO OBTAIN VESSEL SCHEDULE FROM THE OWNER ON A DAILY BASIS.
7. FOR PILE CAP PLATE AND SPLICE DETAILS, SEE DWG. GS–3.
8. ALL STRUCTURAL STEEL FOR THE HANGER ASSEMBLY SHALL BE HOT DIP GALVANIZED AFTER SHOP WELDING OF STIFFENER PLATES. THREADED HANGER RODS SHALL BE ASTM A193 GR. B8M, WITH A MINIMUM TENSILE STRENGTH OF 80 KSI, AND NUTS SHALL CONFORM TO ASTM A194 GR. 8M. WASHERS SHALL BE STAINLESS STEEL 316.
9. DO NOT TACK NUTS. USE LOCK WASHERS, PROPERLY INSTALLED DOUBLE NUTS, OR LOCKING COMPOUND, AS NECESSARY, TO SECURE NUTS AGAINST ROTATION.
10. SUBMIT PROPOSED ROD TENSIONING & NUT–LOCKING PROCEDURES AND EQUIPMENT TO THE ENGINEER FOR APPROVAL PRIOR TO BEGINNING CHANNEL INSTALLATION.

REV.	DESCRIPTION	BY	DATE
1	ISSUED FOR BID	MGW	09/01/16

PHILADELPHIA,PA

PIER 84 SOUTH

PRPA

SEAWALL REINFORCEMENT BEAM DETAILS

URBAN ENGINEERS, INC.
PORTS & WATERWAYS DIVISION
530 WALNUT STREET
PHILADELPHIA, PA. 19106–3685
PHONE (215) 922–8080 FAX (215) 922–8082

DESIGNED BY: MGW/PB

DRAWN BY: VKW/PB

APPROVED BY: MGW

PROJECT NO: 16–126.1

DATE: 11/19/10

SHEET 27 OF 38

S–8

SEAL

COMMONWEALTH OF PENNSYLVANIA REGISTERED PROFESSIONAL ENGINEER Michael G. Wagner No. PE071324

BY: _____

DATE: _____

T:\PROJECTS\On–Going\2006 Projects\601300 PRPA Pier 84S Rehab\Work – 2010\Drawings\FINAL\S–7 SEAWALL REINFORCEMENT BEAM DETAILS.dwg

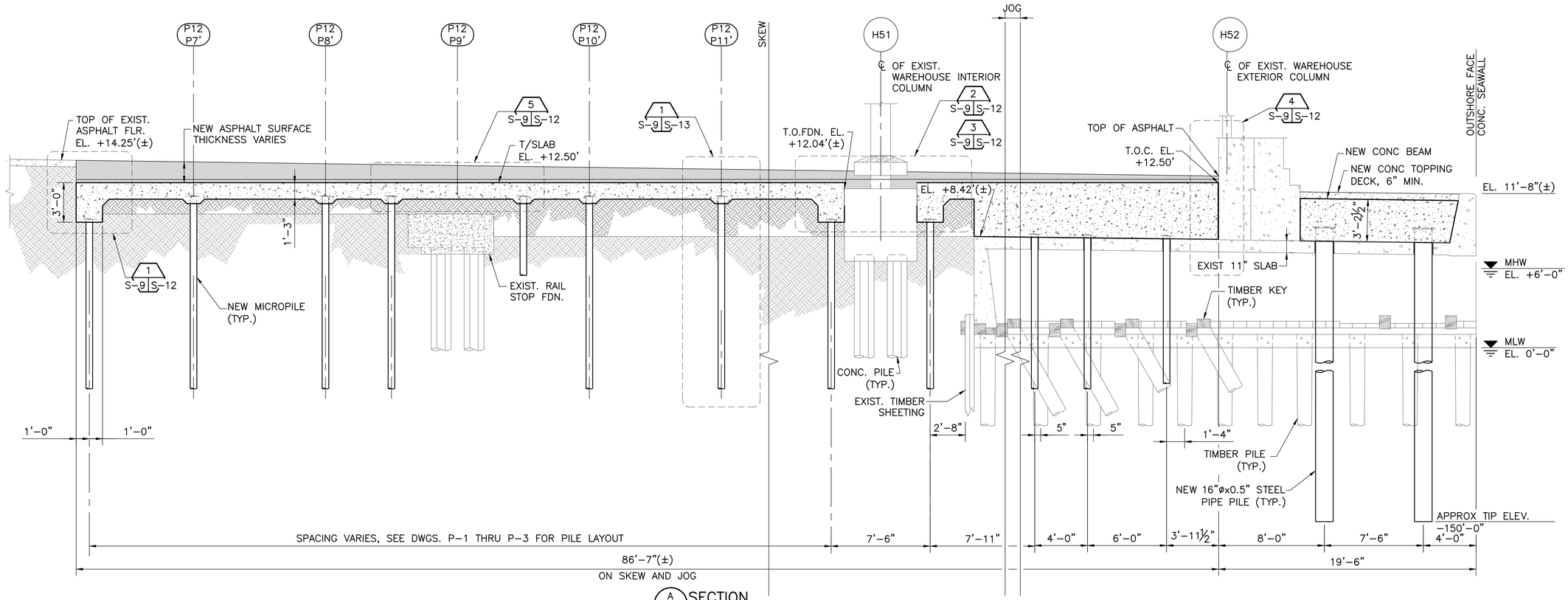

A SECTION
P-2, S-2, S-5 S-9 SCALE: 1" = 4'-0"
(SECTION SHOWN AT COLUMN LINE P12-OP15)

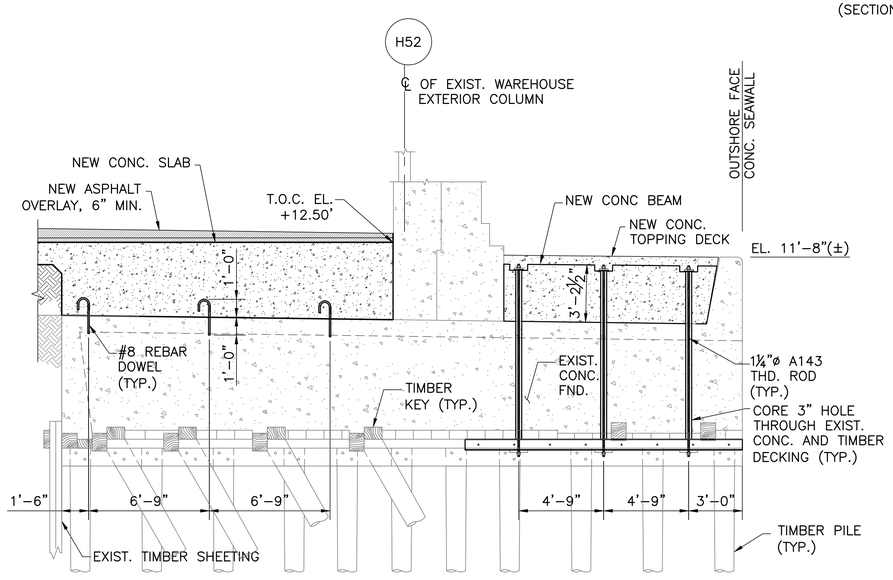

B SECTION
P-2,S-2 S-9 SCALE: 1" = 4'-0"

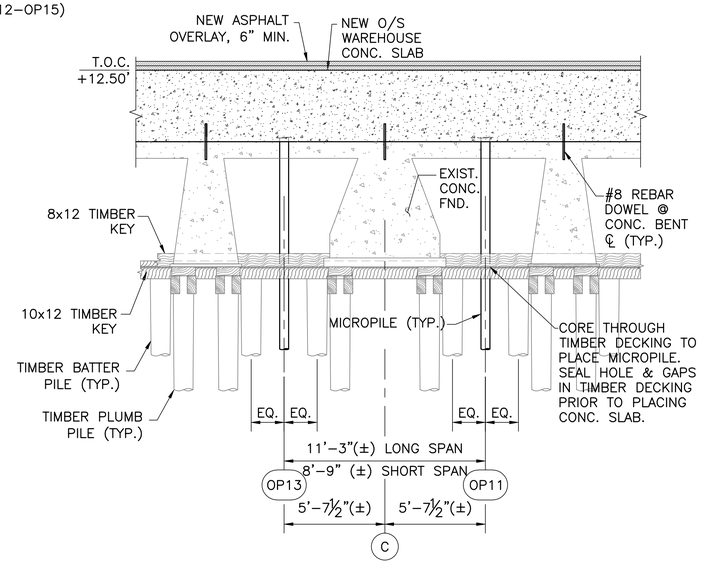

C SECTION
P-2,S-2 S-9 SCALE: 1" = 4'-0"

ISSUED FOR BID
DATE: 09/01/16

LEGEND:

- (X) BUILDING COLUMN/ROW NUMBER
- (P#) NEW INTERIOR PILE COLUMN/ROW NUMBER
- (OP#) NEW IOUTSHORE PILE COLUMN/ROW NUMBER
- EXISTING
- NEW

NOTES:

1. FOR GENERAL NOTES, SEE DWGS. GN-1 & GN-2.
2. FOR DETAILS OF OUTSHORE BEAM, SEE DWGS S-7 AND S-8.
3. NOTE THAT FILL BELOW THE PROPOSED UPPER DECK SLAB INSIDE OF THE TIMBER SHEETING MAY HAVE SETTLED. THE CONTRACTOR MAY CHOOSE TO REPLACE FILL IN ORDER TO POUR THE NEW SLAB ON GRADE, OR TO PROVIDE STIFF, SELF-SUPPORTING FORMWORK TO REMAIN IN PLACE.

REV.	DESCRIPTION	BY	DATE
1	ISSUED FOR BID	MGW	09/01/16

PHILADELPHIA, PA
PRPA
PIER 84 SOUTH
PROPOSED SECTION OF CONCRETE SLAB

URBAN ENGINEERS, INC.
PORTS & WATERWAYS DIVISION
530 WALNUT STREET
PHILADELPHIA, PA. 19106-3685
PHONE (215) 922-8080 FAX (215) 922-8082

DRAWN BY: VKW/PB
DESIGNED BY: MGW/PB
APPROVED BY: MGW
PROJECT NO: 16-126.1
DATE: 11/19/10
SHEET 28 OF 38

S-9

SEAL
COMMONWEALTH OF PENNSYLVANIA
REGISTERED PROFESSIONAL
Michael G. Wagner
ENGINEER
No. PE071324
BY:
DATE:

T:\PROJECTS\On-Going\2006 Projects\601300 PRPA Pier 84S Rehab\Work - 2010\Drawings\FINAL\S-9 PROPOSED SECTION OF CONCRETE SLAB.dwg

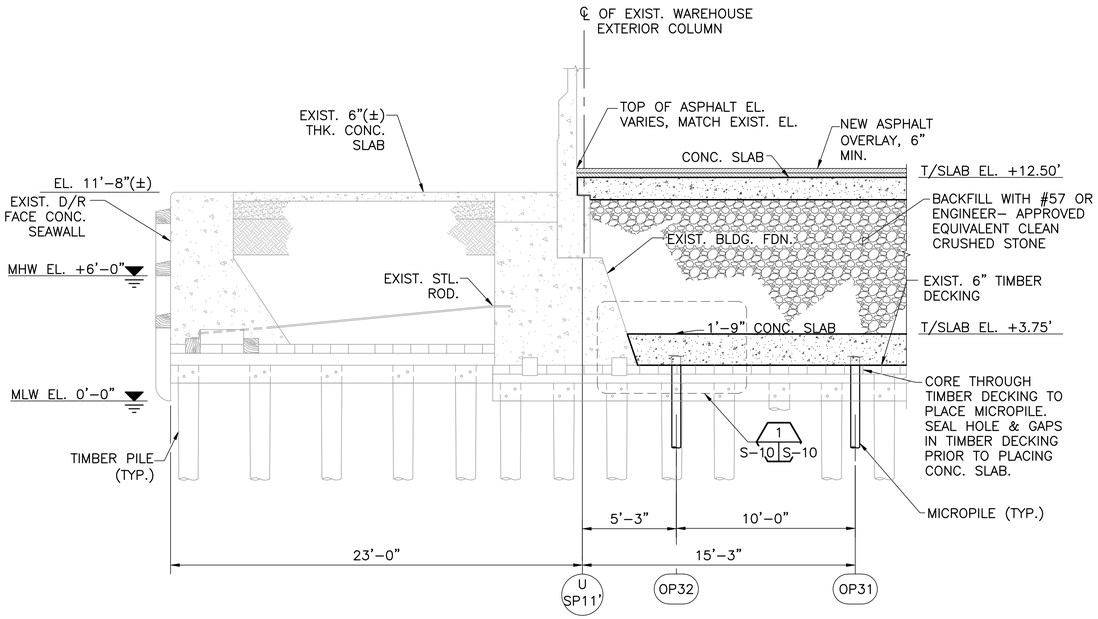

A SECTION
P-1,S-1,S-4 S-10 SCALE: 1/4" = 1'-0"

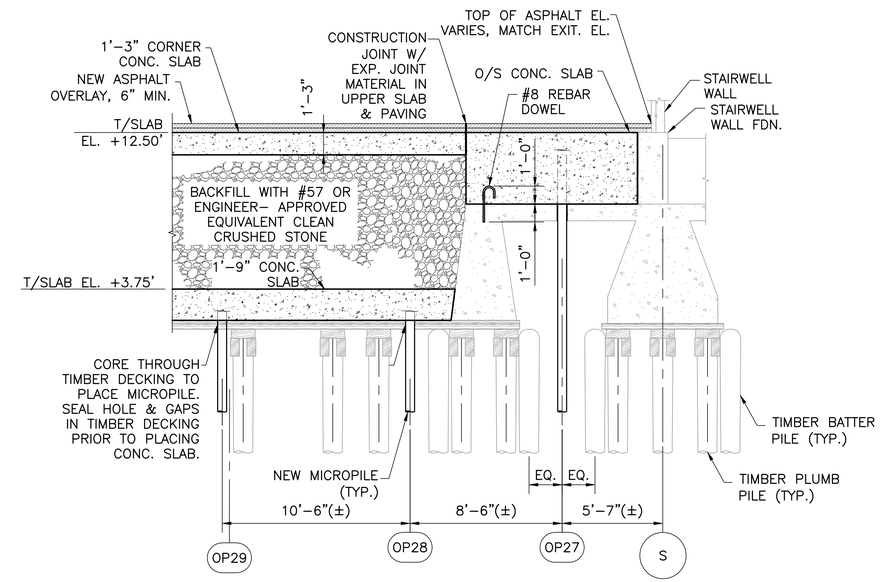

C SECTION
P-1,S-1,S-4 S-10 SCALE: 1/4" = 1'-0"

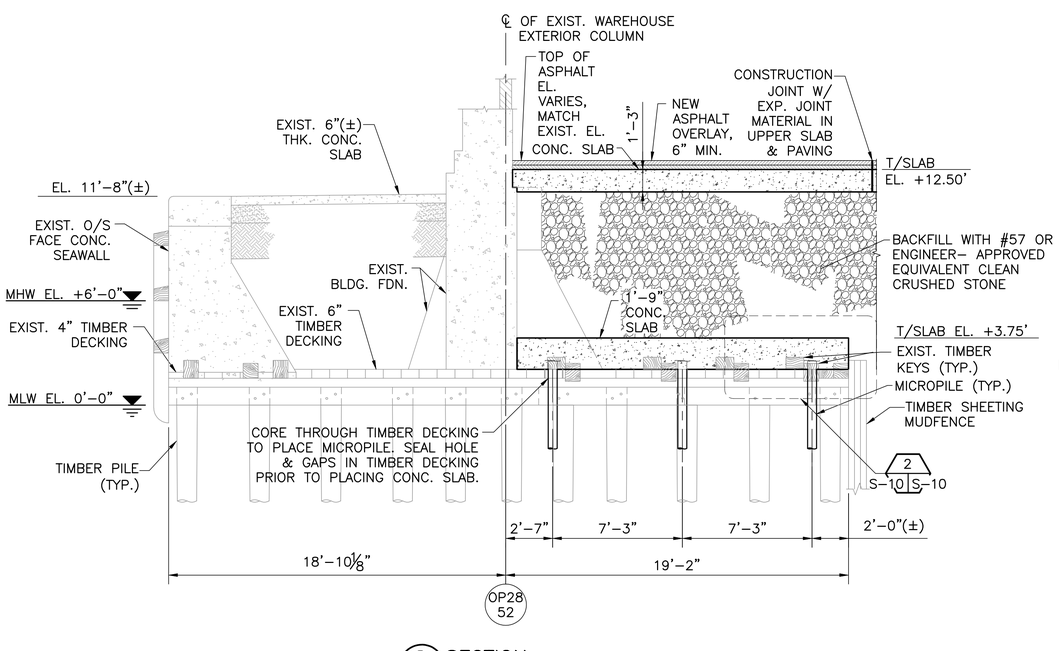

B SECTION
P-1,S-1,S-4 S-10 SCALE: 1/4" = 1'-0"

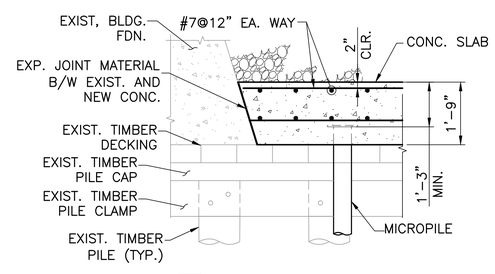

1 DETAIL
S-10 S-10 SCALE: 1/2" = 1'-0"

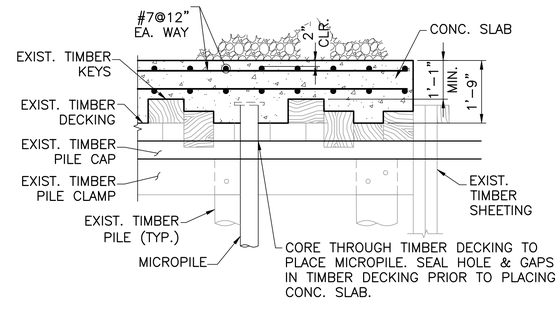

2 DETAIL
S-10 S-10 SCALE: 1/2" = 1'-0"

ISSUED FOR BID
DATE: 09/01/16

LEGEND:

- EXISTING
- NEW
- (X) BUILDING COLUMN/ROW NUMBER
- (SP#) NEW SOUTHSIDE APRON PILE COLUMN/ROW NUMBER
- (OP#) NEW OUTSHORE PILE COLUMN/ROW NUMBER

NOTES:

1. FOR GENERAL NOTES, SEE DWGS. GN-1 & GN-2.

REV.	DESCRIPTION	BY	DATE
1	ISSUED FOR BID	MGW	09/01/16

PRPA
PHILADELPHIA,PA
PIER 84 SOUTH

PROPOSED SECTIONS OF SOUTHEAST CORNER

URBAN ENGINEERS, INC.
PORTS & WATERWAYS DIVISION
530 WALNUT STREET
PHILADELPHIA, PA. 19106-3685
PHONE (215) 922-8080 FAX (215) 922-8082

DESIGNED BY: MGW/PB
DRAWN BY: VKW/PB
APPROVED BY: MGW
PROJECT NO: 16-126.1
DATE: 11/19/10
SHEET 29 OF 38
S-10

SEAL
COMMONWEALTH OF PENNSYLVANIA
REGISTERED PROFESSIONAL
Michael G. Wagner
ENGINEER
No. PE071324
BY:
DATE:

T:\PROJECTS\On-Going\2006 Projects\601300 PRPA Pier 84S Rehab\Work - 2010\Drawings\FINAL\S-10 PROPOSED SECTIONS OF SOUTHEAST CORNER.dwg

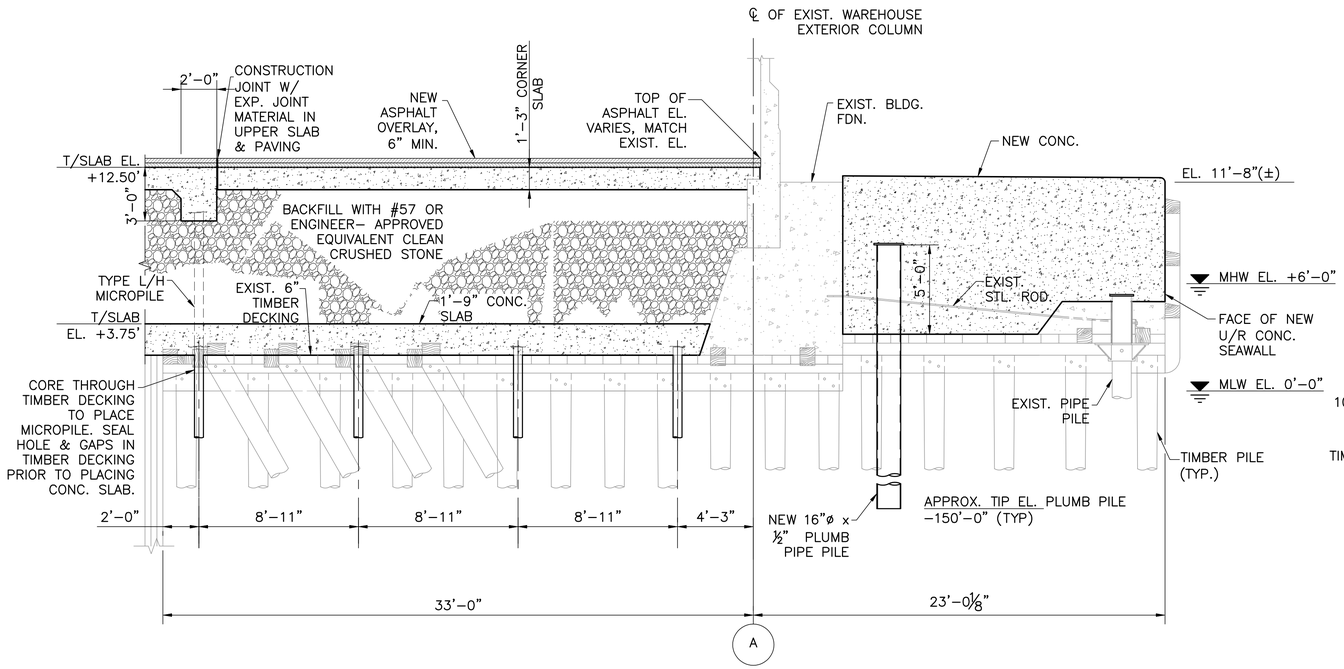

A SECTION
P-3,S-3,S-6 S-11 SCALE: 1/4" = 1'-0"

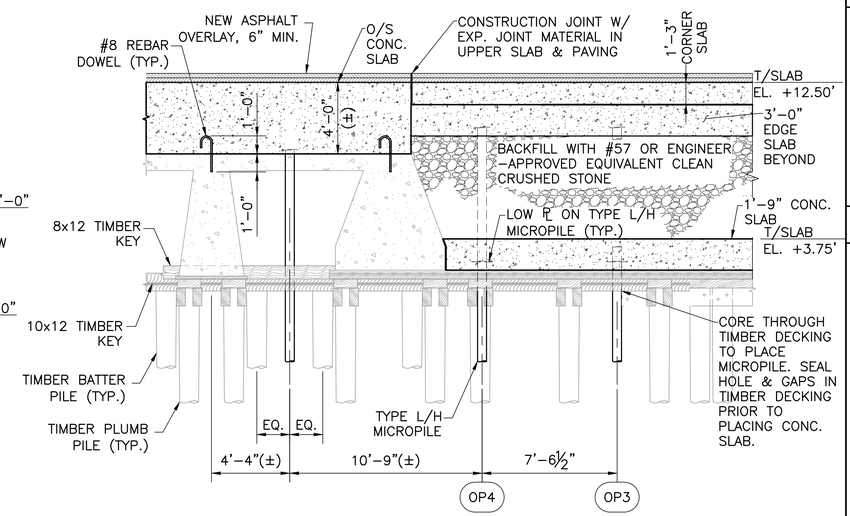

C SECTION
P-3,S-3,S-6 S-11 SCALE: 1/2" = 1'-0"

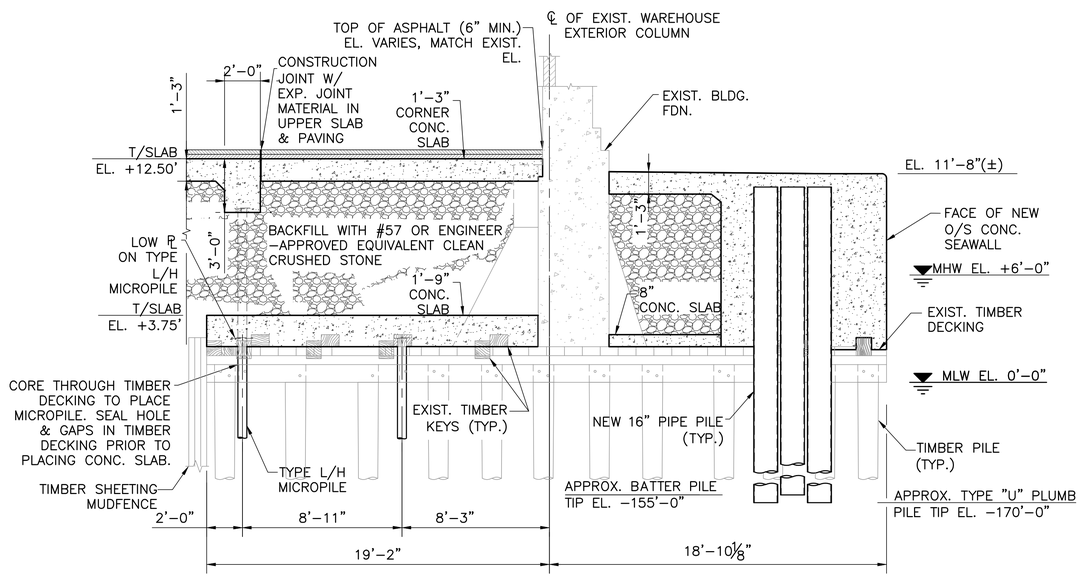

B SECTION
P-3,S-3,S-6 S-11 SCALE: 1/4" = 1'-0"

ISSUED FOR BID
DATE: 09/01/16

LEGEND:

- EXISTING
- NEW
- (X) BUILDING COLUMN/ROW NUMBER
- (SP#) NEW SOUTHSIDE APRON PILE COLUMN/ROW NUMBER
- (OP#) NEW OUTSHORE PILE COLUMN/ROW NUMBER

NOTES:

1. FOR GENERAL NOTES, SEE DWGS. GN-1 & GN-2.

REV.	DESCRIPTION	BY	DATE
1	ISSUED FOR BID	MGW	09/01/16

PRPA — PHILADELPHIA, PA

PIER 84 SOUTH

PROPOSED SECTIONS OF NORTHEAST CORNER

URBAN ENGINEERS, INC.
PORTS & WATERWAYS DIVISION
530 WALNUT STREET
PHILADELPHIA, PA. 19106-3685
PHONE (215) 922-8080 FAX (215) 922-8082

DESIGNED BY: MGW/PB
DRAWN BY: VKW/PB
APPROVED BY: MGW
PROJECT NO: 16-126.1
DATE: 11/19/10
SHEET 30 OF 38

S-11

SEAL: COMMONWEALTH OF PENNSYLVANIA REGISTERED PROFESSIONAL ENGINEER Michael G. Wagner No. PE071324
BY: _____
DATE: _____

T:\PROJECTS\On-Going\2006 Projects\601300 PRPA Pier 84S Rehab\Work - 2010\Drawings\FINAL\S-11 PROPOSED SECTIONS OF NORTHEAST CORNER.dwg

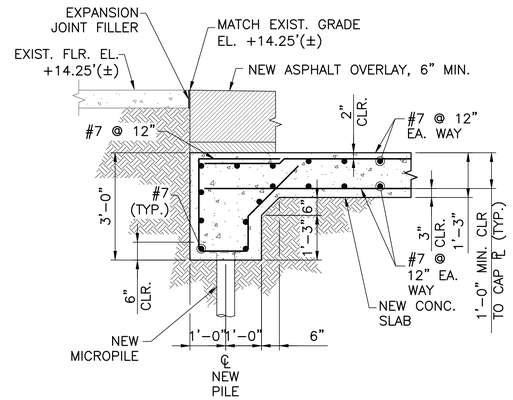

1 DETAIL
S-9 S-12 SCALE: 1/2" = 1'-0"

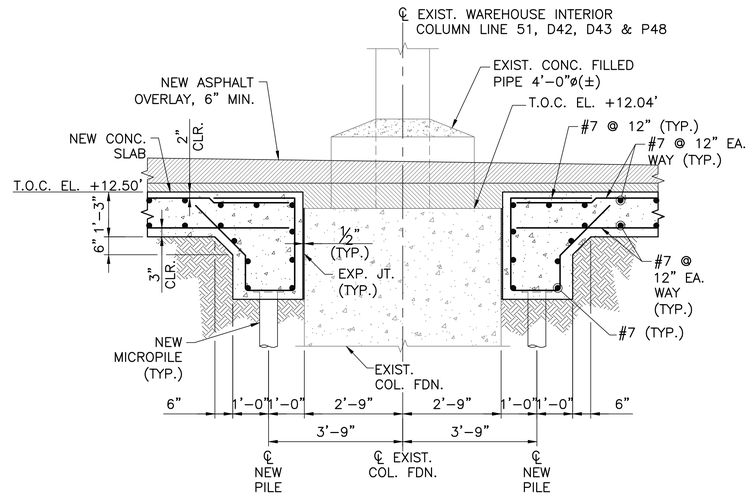

2 DETAIL
S-9 S-12 SCALE: 1/2" = 1'-0"

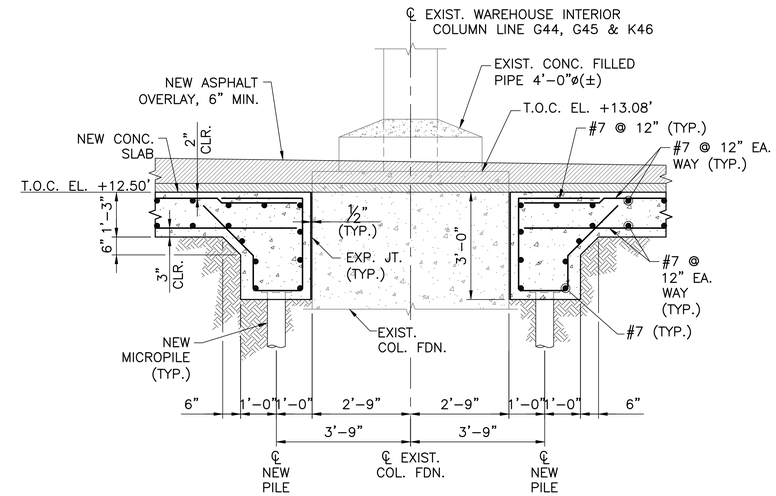

3 DETAIL
S-9 S-12 SCALE: 1/2" = 1'-0"

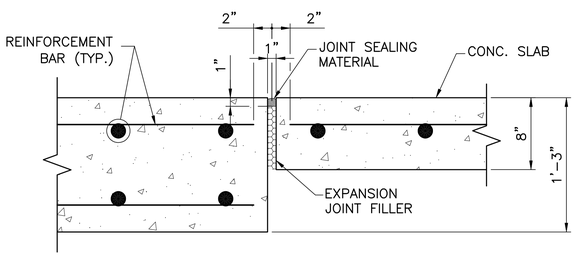

TYPICAL EXPANSION JOINT (EJ) DETAIL
SCALE" 1½" = 1'-0"

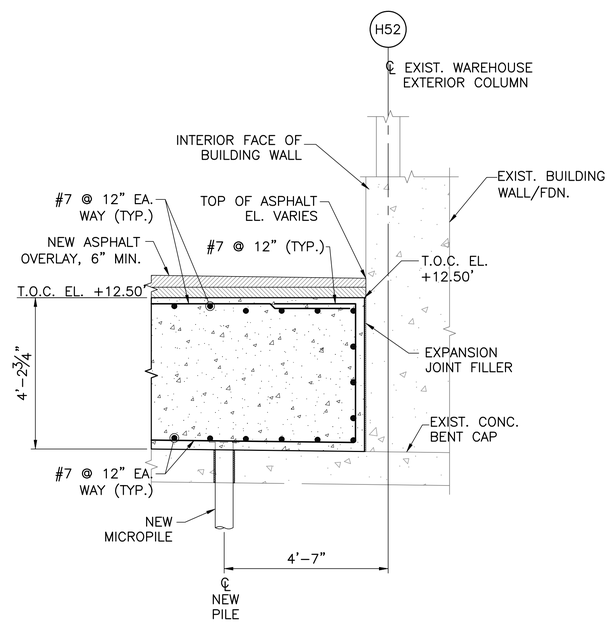

4 DETAIL
S-9 S-12 SCALE: 1/2" = 1'-0"

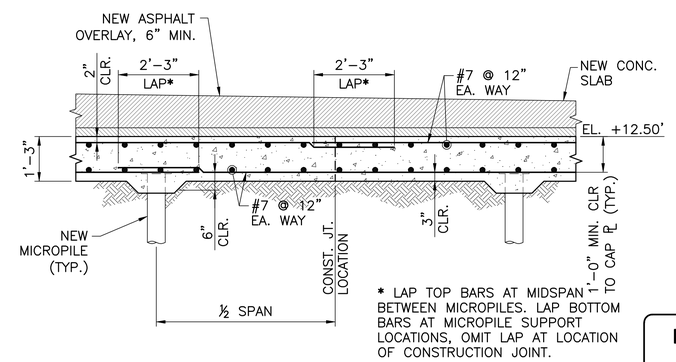

* LAP TOP BARS AT MIDSPAN BETWEEN MICROPILES. LAP BOTTOM BARS AT MICROPILE SUPPORT LOCATIONS, OMIT LAP AT LOCATION OF CONSTRUCTION JOINT.

5 DETAIL
S-9 S-12 SCALE: 1/2" = 1'-0"

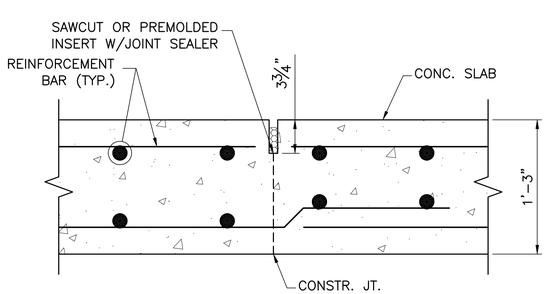

TYPICAL CONSTRUCTION/CONTRACTION JOINT (CJ) DETAIL
SCALE" 1½" = 1'-0"

ISSUED FOR BID
DATE: 09/01/16

LEGEND:

- (X) BUILDING COLUMN/ROW NUMBER
- EXISTING
- NEW

NOTES:

1. FOR GENERAL NOTES, SEE DWGS. GN-1 & GN-2.
2. PROVIDE CONSTRUCTION/CONTRACTION JOINTS AT A MINIMUM SPACING OF 40'. SUBMIT PROPOSED CONSTRUCTION JOINT PLAN TO THE ENGINEER FOR REVIEW.

REV.	DESCRIPTION	BY	DATE
1	ISSUED FOR BID	MGW	09/01/16

PRPA
PHILADELPHIA,PA
PIER 84 SOUTH

PROPOSED CONCRETE SLAB – DETAILS

URBAN ENGINEERS, INC.
PORTS & WATERWAYS DIVISION
530 WALNUT STREET
PHILADELPHIA, PA. 19106-3685
PHONE (215) 922-8080 FAX (215) 922-8082

DRAWN BY: VKW/PB
DESIGNED BY: MGW/PB
PROJECT NO: 16-126.1
APPROVED BY: MGW

DATE: 11/19/10
SHEET 31 OF 38
S-12

SEAL
COMMONWEALTH OF PENNSYLVANIA
REGISTERED PROFESSIONAL
Michael G. Wagner
ENGINEER
No. PE071324
BY:
DATE:

T:\PROJECTS\On-Going\2006 Projects\601300 PRPA Pier 84S Rehab\Work – 2010\Drawings\FINAL\S-12 PROPOSED CONCRETE SLAB – DETAILS.dwg

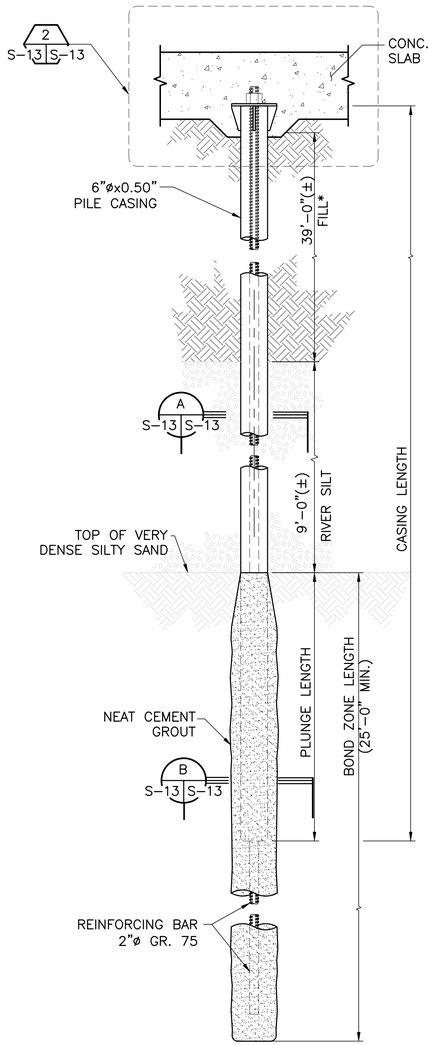

1 TYPICAL MICRO-PILE SECTION
S-9 S-13 SCALE ¾" = 1'-0"

*NOTE THAT MICROPILES LOCATED OUTSIDE OF THE TIMBER MUD FENCE WILL PASS THROUGH THE WATER COLUMN RATHER THAN FILL. MUDLINE ELEVATIONS VARY, SEE DWG GA-4 FOR SOUNDINGS.

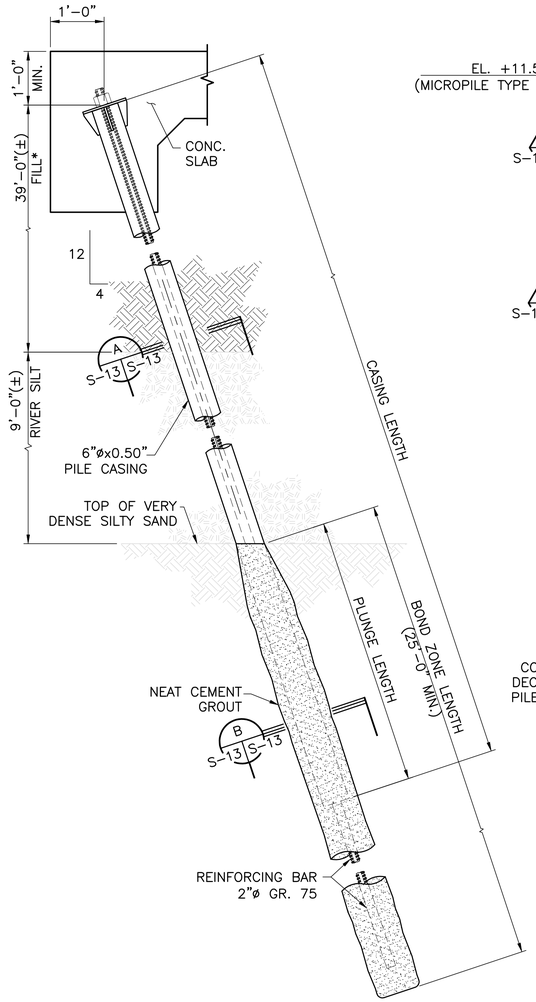

1 TYPICAL BATTERED MICRO-PILE SECTION
S-9 S-13 SCALE ¾" = 1'-0"

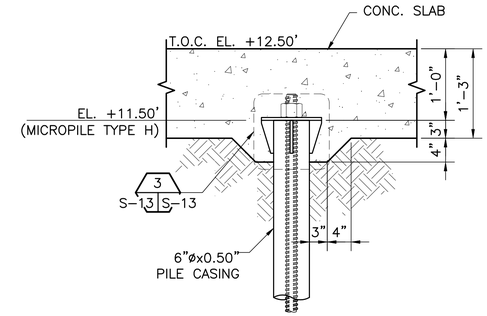

2 DETAIL - MICROPILE TYPE 'H'
S-13 S-13 SCALE: 1" = 1'-0"

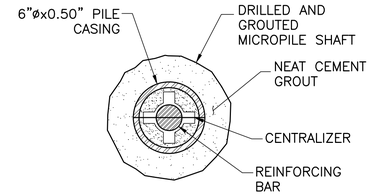

A SECTION
S-13 S-13 SCALE: 2" = 1'-0"

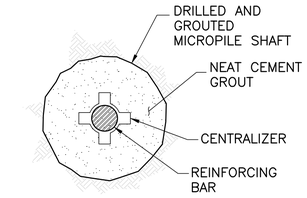

B SECTION
S-13 S-13 SCALE: 2" = 1'-0"

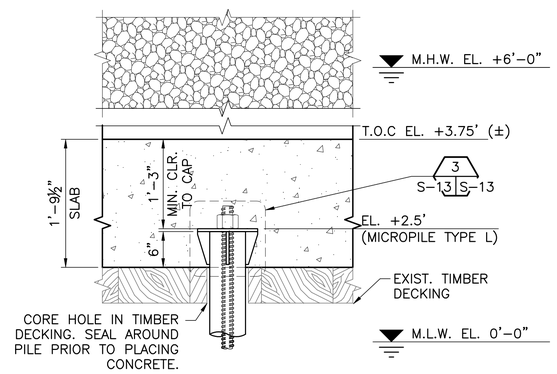

TYPICAL DETAIL - MICROPILE TYPE 'L'
SCALE 1" = 1'-0"

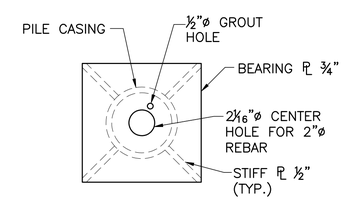

PLAN

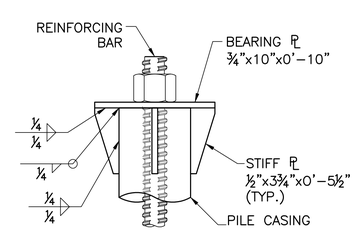

3 DETAIL
S-13 S-13 SCALE: 2" = 1'-0"

ISSUED FOR BID
DATE: 09/01/16

LEGEND:

EXISTING
NEW

NOTES:

1. FOR GENERAL NOTES, SEE DWGS. GN-1 & GN-2.
2. SIZES AND DETAILS OF THE MICROPILE SYSTEM SHOWN ON THIS DWG ARE NOMINAL AND FOR REPRESENTATION PURPOSES ONLY. ACTUAL SIZES, DETAILS AND DIMENSIONS OF THE MICROPILE SYSTEM SHALL BE DETERMINED BY THE MICROPILE CONTRACTOR. THE MICROPILE CONTRACTOR SHALL DESIGN THE MICROPILES TO ACHIEVE THE CAPACITIES AND FACTORS OF SAFETY LISTED ON DWG GN-2 AND SUBMIT SEALED DESIGN DRAWINGS AND CALCULATIONS TO THE ENGINEER. FOR ADDITIONAL INFORMATION ON THE DESIGN-BUILD OF THE MICROPILES, SEE THE TECHNICAL SPECIFICATIONS.
3. FOR MICROPILE LOAD TEST REQUIREMENTS, SEE DWG GN-2.
4. THE QUALITY OF THE GROUT SHALL BE MONITORED BY COLLECTING GROUT CUBES FOR LATER COMPRESSION TESTING AND BY MEASURING THE GROUT SPECIFIC GRAVITY FROM ONE BATCH PER DAY. SEE THE TECHNICAL SPECIFICATIONS FOR FURTHER DETAILS.
6. THE CONSISTENCY OF MICROPILE INSTALLATION SHALL BE MONITORED AND RECORDED, AS DESCRIBED IN THE TECHNICAL SPECIFICATIONS. MICROPILE INSTALLATION RECORDS SHALL INCLUDE TOTAL MICROPILE DEPTH, GROUT PRESSURES AND QUANTITIES, SOILS/ROCK ENCOUNTERED DURING INSTALLATION AND ANY OBSTRUCTIONS OR IRREGULARITIES.
7. HARD DRILLING CONDITIONS ARE EXPECTED, PARTICULARLY WITHIN THE TIMBER MUD FENCE. CONCRETE AND ROCK INCLUSIONS SHOULD BE ANTICIPATED. IF MICROPILES CANNOT BE INSTALLED IN PROPOSED LOCATIONS, THE CONTRACTOR SHALL SUBMIT A PROPOSED ALTERNATE LOCATION TO THE ENGINEER.
8. TYPICAL OVERHEAD CLEARANCES INSIDE THE WAREHOUSE RANGE FROM 15 FT-20 FT. THE CONTRACTOR SHALL VERIFY WAREHOUSE CLEARANCES PRIOR TO PROCURING MICROPILE STEEL SECTIONS.
9. THE MICROPILE CONTRACTOR SHALL DETERMINE ALL MATERIAL GRADES TO ACHIEVE THE REQUIRED DESIGN CAPACITIES. THE STEEL CASING SHALL BE COATED WITH COAL TAR EPOXY, OR AN ENGINEER-APPROVED EQUIVALENT.
10. THE CONDITION OF THE TIMBER DECK IS NOT KNOWN, AND THE DECK AND SUPPORTING TIMBER PILES MAY NOT BE SUITABLE FOR THE SUPPORT OF MICROPILE CONSTRUCTION EQUIPMENT. THE CONTRACTOR SHALL BE RESPONSIBLE FOR NECESSARY MEASURES REQUIRED TO TEMPORARILY SUPPORT CONSTRUCTION LOADS IN THE ARE OF TYPE "L" MICROPILE INSTALLATION.

REV.	DESCRIPTION	BY	DATE
1	ISSUED FOR BID	MGW	09/01/16

PHILADELPHIA, PA
PIER 84 SOUTH
PRPA
MICROPILE DETAILS

URBAN ENGINEERS, INC.
PORTS & WATERWAYS DIVISION
530 WALNUT STREET
PHILADELPHIA, PA. 19106-3685
PHONE (215) 922-8080 FAX (215) 922-8082

DRAWN BY: VKW/PB
DESIGNED BY: MGW/PB
PROJECT NO: 16-126.1
APPROVED BY: MGW

DATE: 11/19/10
SHEET 32 OF 38
S-13

SEAL
COMMONWEALTH OF PENNSYLVANIA REGISTERED PROFESSIONAL ENGINEER Michael G. Wagner No. PE071324
BY:
DATE:

T:\PROJECTS\On-Going\2006 Projects\601300 PRPA Pier 84S Rehab\Work - 2010\Drawings\FINAL\S-12 PROPOSED CONCRETE SLAB - DETAILS.dwg

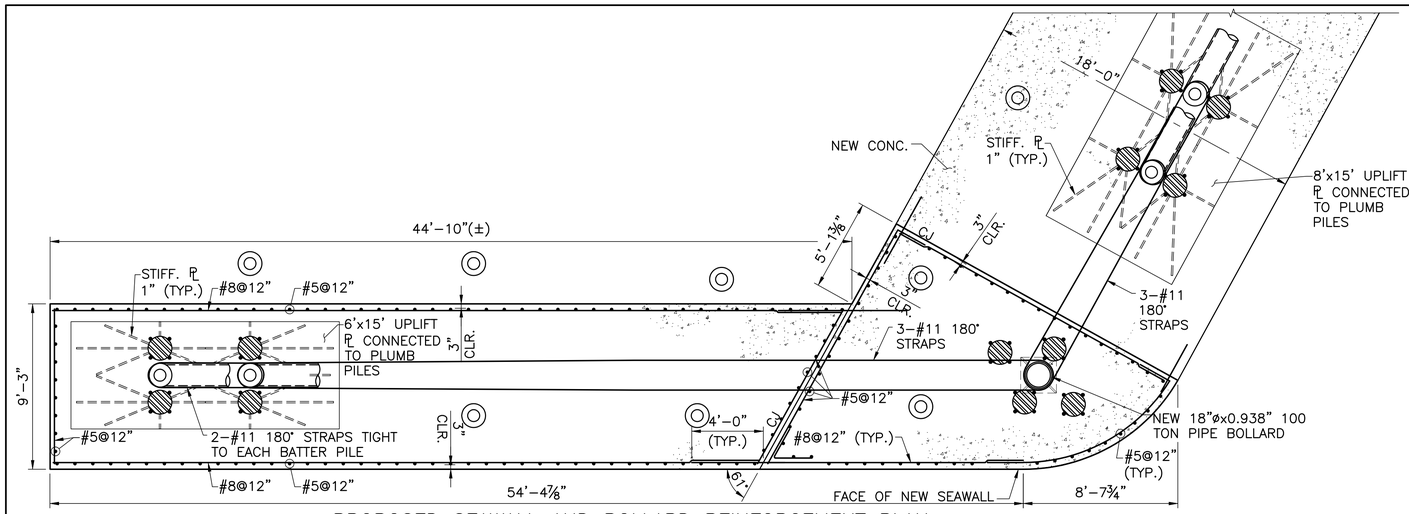

PROPOSED SEAWALL AND BOLLARD REINFORCEMENT PLAN

SCALE: ¼" = 1'-0"

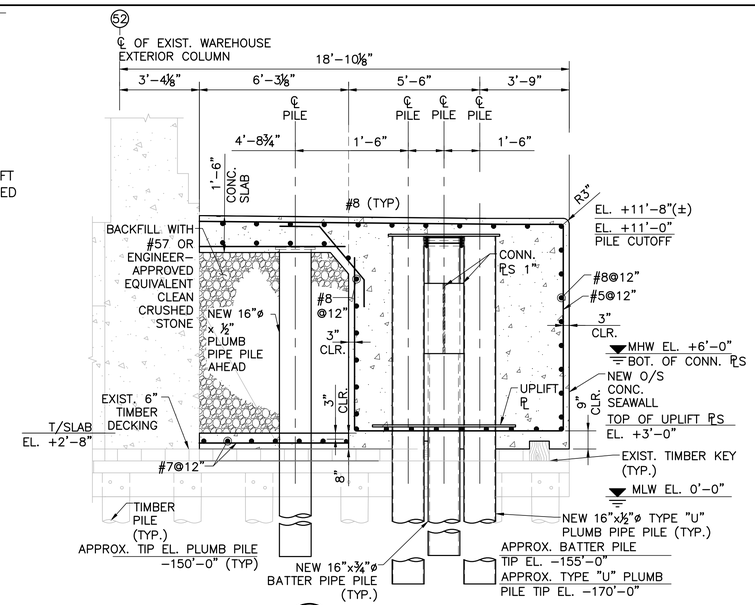

A SECTION

S-14 S-14 SCALE: 3/8" = 1'-0"

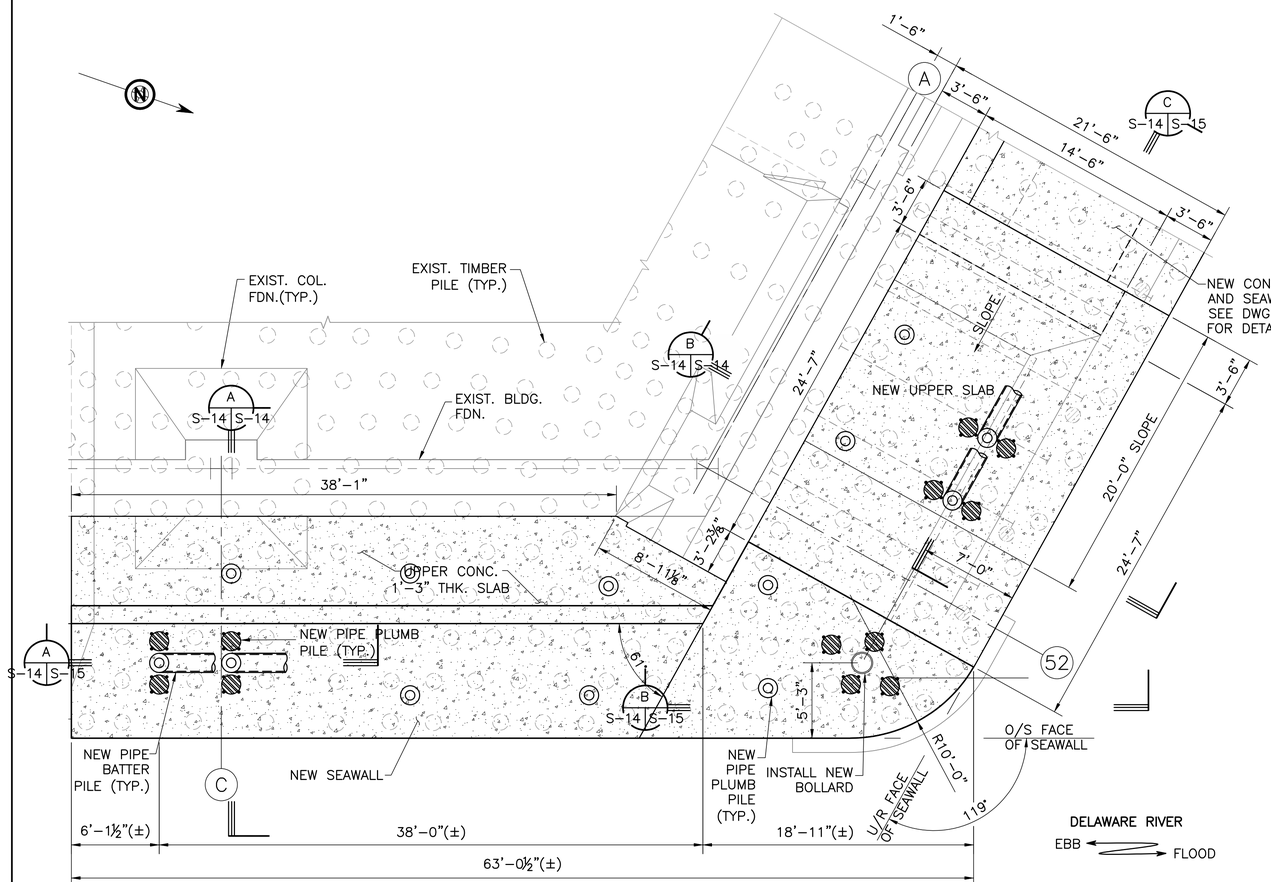

PLAN

SCALE: 1" = 5'-0"

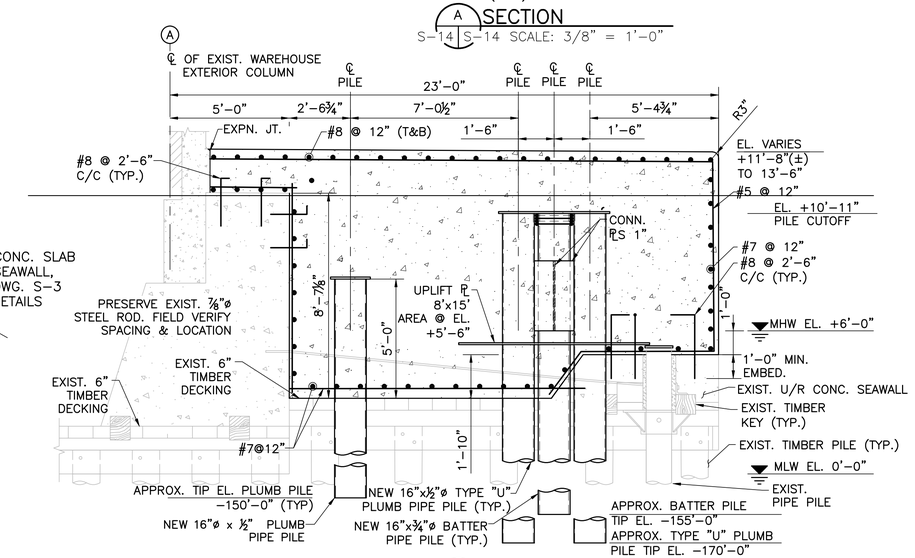

B SECTION

S-14 S-14 SCALE: 3/8" = 1'-0"

LEGEND:

- EXISTING
- NEW
- EXIST. STEEL PIPE PILE
- EXIST. TIMBER PLUMB PILE
- EXIST. TIMBER BATTER PILE
- # BENT NUMBER
- X BUILDING COLUMN/ROW NUMBER

NOTES:

1. FOR GENERAL NOTES, SEE DWGS. ~~CN-1 & CN-2.~~
2. FOR DETAILS OF LOWER SLAB, SEE DWG. S-6.
3. REINSTALLED FENDER NOT SHOWN FOR CLARITY. REINSTALL FENDER, CHAINS AND PADEYE PLATES IN THEIR ORIGINAL LOCATIONS ON THE NORTH SEAWALL. PADEYE PLATE ANCHORS SHALL BE REPLACED IN-KIND AND CAST INTO THE NEW SEAWALL. SEE DWG. DM-3 FOR LOCATION AND DEMOLITION INFORMATION.
4. NEW 16"ø PIPE PLUMB PILES SHALL BE CUT-OFF SUCH THAT THE CAP PL S ARE BELOW THE MAIN LONGITUDINAL REINFORCEMENT.

ISSUED FOR BID

DATE: 09/01/16

REV.	DESCRIPTION	BY	DATE
1	ISSUED FOR BID	MGW	09/01/16

PRPA

PHILADELPHIA,PA

PIER 84 SOUTH

PROPOSED NORTHEAST CORNER PLAN AND DETAILS

URBAN ENGINEERS, INC.
PORTS & WATERWAYS DIVISION
530 WALNUT STREET
PHILADELPHIA, PA. 19106-3685
PHONE (215) 922-8080 FAX (215) 922-8082

DESIGNED BY: MGW/PB

DRAWN BY: VKW/PB

APPROVED BY: MGW

PROJECT NO: 16-126.1

DATE: 11/19/10

SHEET 33 OF 38

S-14

SEAL

COMMONWEALTH OF PENNSYLVANIA
REGISTERED PROFESSIONAL ENGINEER
Michael G. Wagner
No. PE071324

BY: _____

DATE: _____

T:\PROJECTS\On-Going\2006 Projects\601300 PRPA Pier 84S Rehab\Work - 2010\Drawings\FINAL\S-14 PROPOSED NORTHEAST CORNER PLAN AND DETAILS.dwg

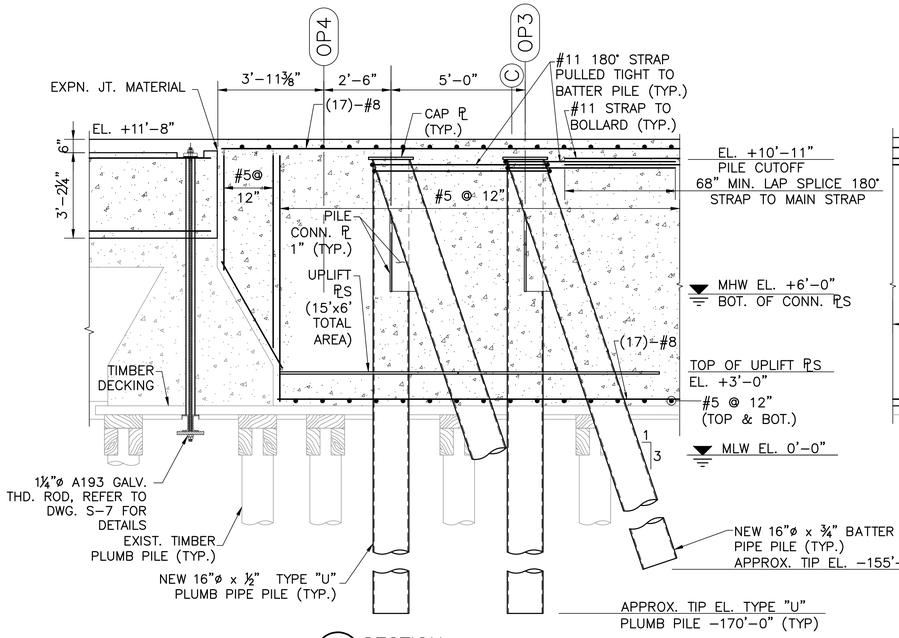

A SECTION
S-14 S-15 SCALE: 3/8" = 1'-0"

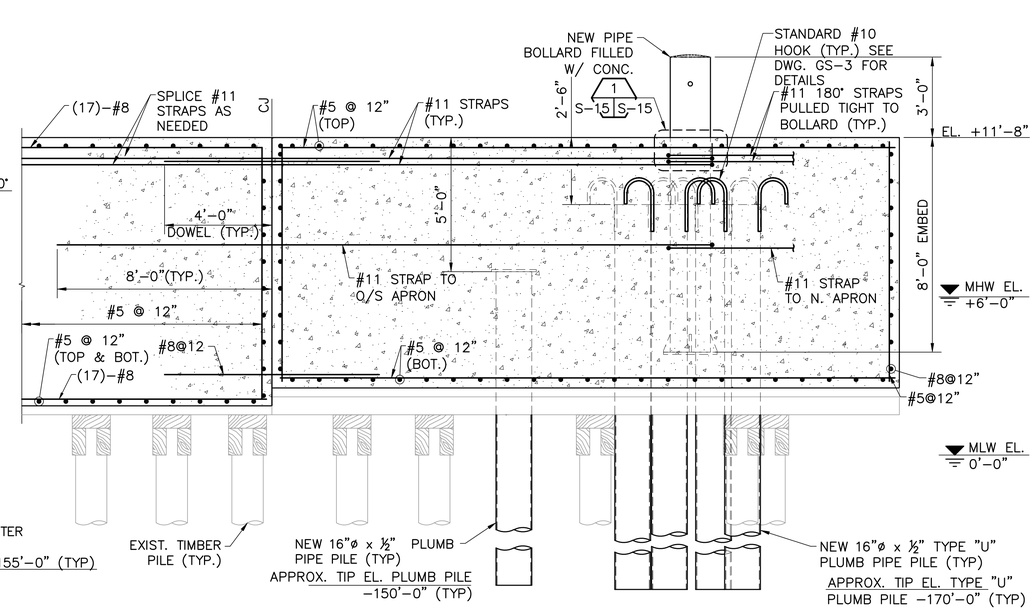

B SECTION
S-14 S-15 SCALE: 3/8" = 1'-0"

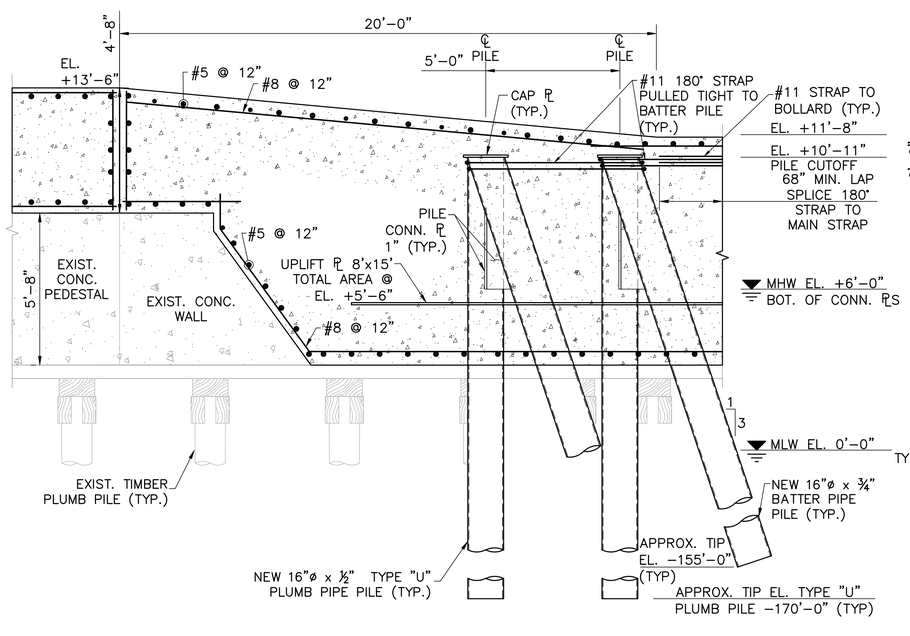

C SECTION
S-14 S-15 SCALE: 3/8" = 1'-0"

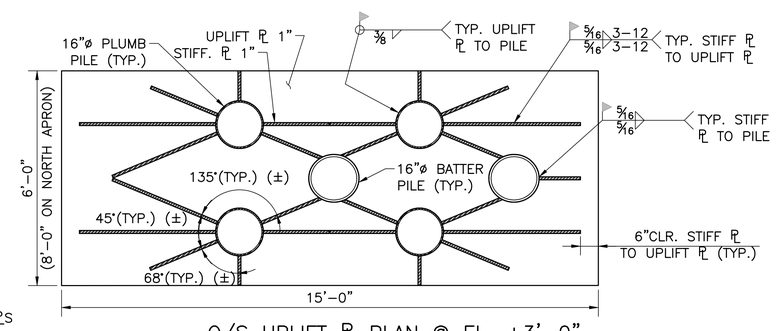

O/S UPLIFT PL PLAN @ EL. +3'-0"
(N. APRON PL SIMILAR, @ EL. +5'-6")
SCALE: ¾" = 1'-0"

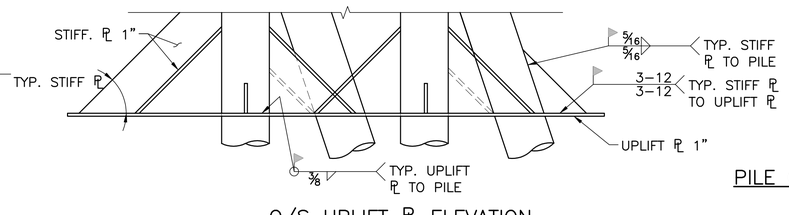

O/S UPLIFT PL ELEVATION
(N. APRON PL SIMILAR)
SCALE: ¾" = 1'-0"

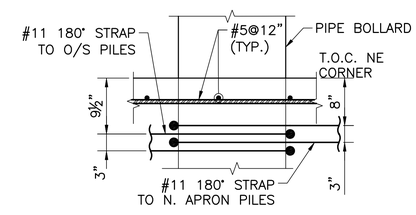

1 S-15 S-15 DETAIL
SCALE: 1" = 1'-0"

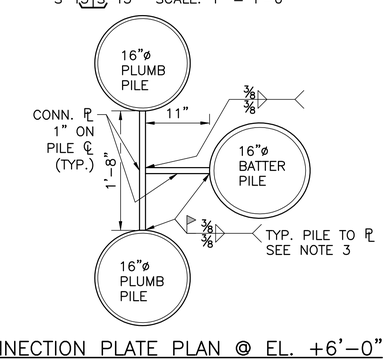

PILE CONNECTION PLATE PLAN @ EL. +6'-0"
SCALE: 1" = 1'-0"

LEGEND:

EXISTING
NEW

NOTES:

1. FOR GENERAL NOTES, SEE DWGS. GN-1 & GN-2.
2. REFER TO SHEETS P-1 THRU P-3 FOR PILE LOCATION.
3. FETCH PLUMB TO BATTER PILE CONNECTION PLATES LONG AND ADJUST PLATE DIMENSIONS IN THE FIELD TO FIT PILES AS-DRIVEN. DO NOT PULL PILES INTO POSITION TO MAKE WELDS.

ISSUED FOR BID
DATE: 09/01/16

REV.	DESCRIPTION	BY	DATE
1	ISSUED FOR BID	MGW	09/01/16

PHILADELPHIA, PA
PRPA
PIER 84 SOUTH

PROPOSED NORTHEAST CORNER SEAWALL DETAILS

URBAN ENGINEERS, INC.
PORTS & WATERWAYS DIVISION
530 WALNUT STREET
PHILADELPHIA, PA. 19106-3685
PHONE (215) 922-8080 FAX (215) 922-8082

DESIGNED BY: MGW/PB
APPROVED BY: MGW
DRAWN BY: VKW/PB
PROJECT NO: 16-126.1

DATE: 11/19/10
SHEET 34 OF 38
S-15

SEAL
COMMONWEALTH OF PENNSYLVANIA
REGISTERED PROFESSIONAL
Michael G. Wagner
ENGINEER
No. PE071324

BY:
DATE:

T:\PROJECTS\On-Going\2006 Projects\601300 PRPA Pier 84S Rehab\Work - 2010\Drawings\FINAL\S-15 PROPOSED NORTHEAST CORNER SEAWALL DETAILS.dwg

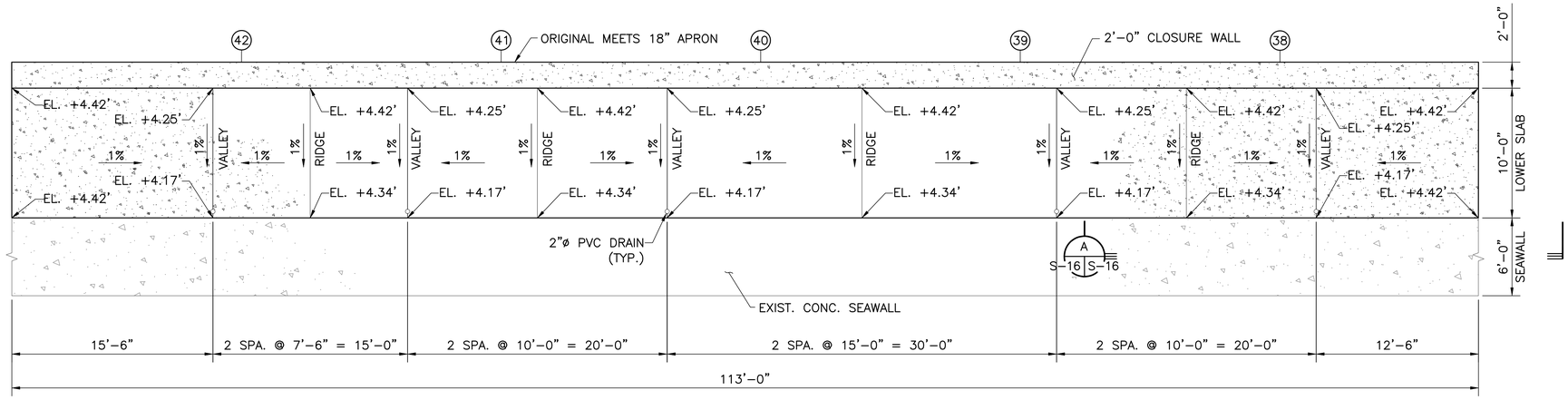

LOWER CONCRETE SLAB – DRAINAGE PLAN

SCALE: 1" = 5'-0"

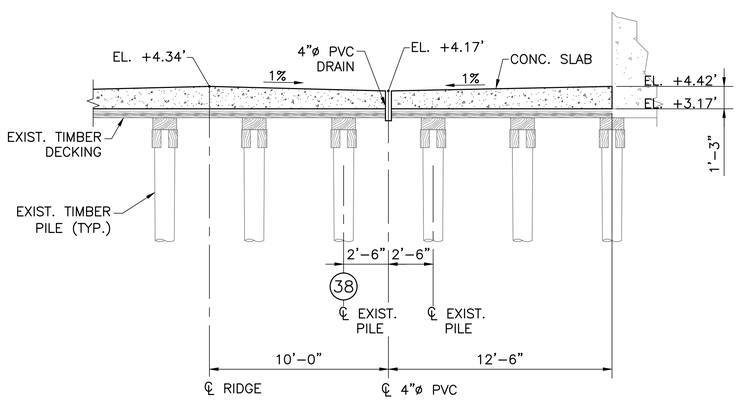

A SECTION

S-16 S-16 SCALE: 1" = 4'-0"

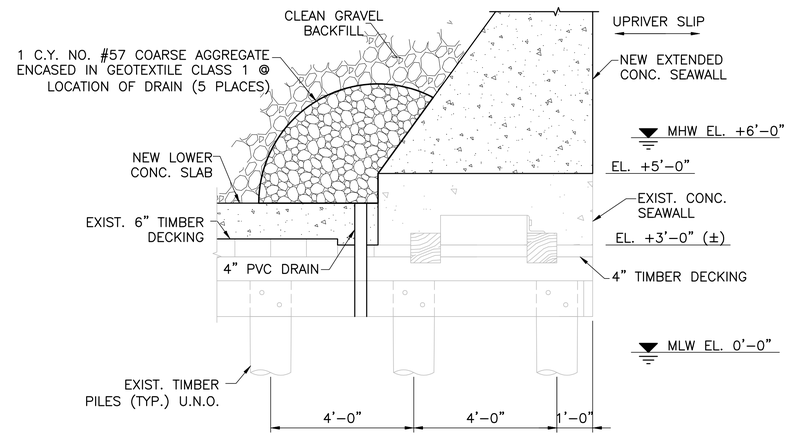

TYPICAL SECTION AT DRAIN

SCALE: ½" = 1'-0"

ISSUED FOR BID

DATE: 09/01/16

LEGEND:

- BUILDING COLUMN/ROW NUMBER
- EXISTING
- NEW

NOTES:

1. FOR GENERAL NOTES, SEE DWGS. GN-1 & GN-2.
2. FOR DETAILS OF LOWER SLAB, SEE DWG. S-6.

REV.	DESCRIPTION	BY	DATE
1	ISSUED FOR BID	MGW	09/01/16

PRPA PHILADELPHIA, PA

PIER 84 SOUTH

PROPOSED DRAINAGE PLAN OF LOWER CONCRETE SLAB

URBAN ENGINEERS, INC.
PORTS & WATERWAYS DIVISION
530 WALNUT STREET
PHILADELPHIA, PA. 19106-3685
PHONE (215) 922-8080 FAX (215) 922-8082

DESIGNED BY: MGW/PB
DRAWN BY: VKW/PB
APPROVED BY: MGW
PROJECT NO: 16-126.1

DATE: 11/19/10

SHEET 35 OF 38

S-16

SEAL: COMMONWEALTH OF PENNSYLVANIA REGISTERED PROFESSIONAL ENGINEER Michael G. Wagner No. PE071324

BY: _____

DATE: _____

T:\PROJECTS\On-Going\2006 Projects\601300 PRPA Pier 84S Rehab\Work – 2010\Drawings\FINAL\S-16 PROPOSED DRAINAGE PLAN OF LOWER CONCRETE SLAB.dwg

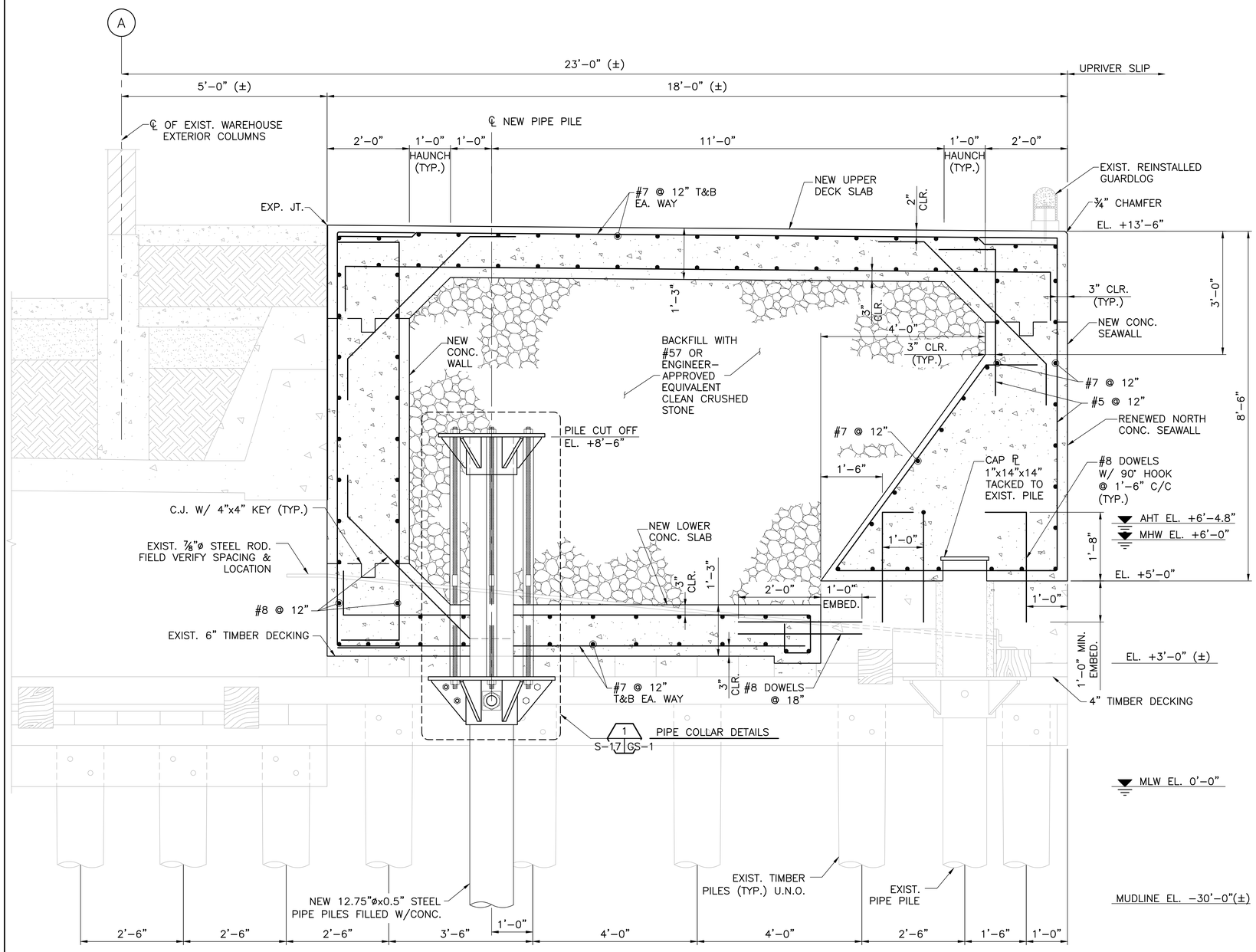

A SECTION
P-3,S-3,S-6 S-17 SCALE: 3/4" = 1'-0"

LEGEND:

EXISTING
NEW

ISSUED FOR BID
DATE: 09/01/16

NOTES:

1. FOR GENERAL NOTES, SEE DWGS. GN-1 & GN-2.
2. ATTRIBUTES OF THE EXISTING STRUCTURE, INCLUDING DIMENSIONS, HAVE BEEN OBTAINED FROM HISTORICAL DRAWINGS. SITE CONDITIONS MAY VARY. THE CONTRACTOR SHALL FIELD VERIFY ALL DIMENSIONS AND ELEVATIONS PRIOR TO PROCUREMENT OF MATERIAL. THE CONTRACTOR SHALL NOT BE PAID ADDITIONAL COST FOR VARIATIONS.
3. PILES SHALL BE DRIVEN THRU CORES IN THE EXISTING TIMBER DECK WITHOUT CAUSING DAMAGE TO THE EXISTING STRUCTURE. ANY DAMAGE TO THE EXISTING STRUCTURE SHALL BE REPAIRED BY THE CONTRACTOR AT HIS OWN EXPENSE, WITH A WRITTEN APPROVAL OF THE ENGINEER, THE CONTRACTOR MAY CHOOSE TO CORE A LARGER HOLE TO PREVENT THIS DAMAGE, AT HIS OWN EXPENSE.
4. REFER TO SHEET P-3 FOR PILE LOCATIONS.
5. PLACE NEW STEEL PILES TO AVOID INTERFERENCE WITH EXISTING TIMBER PILES.
6. FOR PILE SPLICE DETAILS, SEE DWG. GS-3.
7. THREADED HANGER RODS SHALL BE ASTM A193 GR. B8M, WITH A MINIMUM TENSILE STRENGTH OF 80 KSI, AND NUTS SHALL CONFORM TO ASTM A194 GR. 8M. WASHERS SHALL BE STAINLESS STEEL 316.
8. DO NOT TACK NUTS. USE LOCK WASHERS, PROPERLY INSTALLED DOUBLE NUTS, OR LOCKING COMPOUND, AS NECESSARY, TO SECURE NUTS AGAINST ROTATION.
9. SUBMIT PROPOSED ROD TENSIONING & NUT-LOCKING PROCEDURES AND EQUIPMENT TO THE ENGINEER FOR APPROVAL PRIOR TO BEGINNING COLLAR INSTALLATION.
10. REINSTALL FENDERS, CHAINS AND PADEYE PLATES IN THEIR ORIGINAL LOCATIONS ON THE NORTH SEAWALL. PADEYE PLATE ANCHORS SHALL BE REPLACED IN-KIND AND CAST INTO THE NEW SEAWALL. SEE DWG. DM-4 FOR LOCATION AND DEMOLITION INFORMATION.

RECOMMENDED* COLLAR INSTALLATION SEQUENCE:

1. EXCAVATE TO EXISTING TIMBER DECK AND CORE/CUT HOLE FOR 12.75"ø PILE. INSTALL PILE.
2. TEMPORARILY ANCHOR LOWER COLLAR ASSEMBLY PIECES TO TIMBER DECK, SHIM AS REQUIRED TO ENSURE THAT THE LOWER COLLAR FULLY BEARS ON THE DECK IN A PLUMB POSITION, AND BOLT LOWER COLLAR HALVES TOGETHER.
3. DRILL THROUGH THE TIMBER DECK FOR THE THREADED RODS AND SLEEVES; MAKE PILE CUTOFFS, GRIND PILE TOP LEVEL TO BEAR, AND SET TOP COLLAR SLEEVE.
4. SET THE THREADED RODS IN THE 3"ø PVC SLEEVES, ALONG WITH NECESSARY LOCK WASHERS/DOUBLE NUTS.
5. SECURE THE BOTTOM NUTS TO THE COLLAR PLATE, EITHER BY TIGHTENING DOUBLE NUTS AGAINST EACH OTHER OR USING LOCK WASHERS. ONCE ALL NUTS ARE IN CONTACT, REMOVE THE TEMPORARY ANCHORS BETWEEN THE COLLAR AND THE TIMBER DECK.
6. WORKING FROM THE TOP, SNUG TIGHTEN THE NUTS ON THE THREADED RODS, WORKING IN CYCLES, TO JUST PULL THE LOWER COLLAR ASSEMBLY INTO FIRM CONTACT WITH THE TIMBER DECKING. DO NOT TENSION THE RODS BEYOND WHAT IS NECESSARY TO PREVENT LOOSENING OF THE NUT.
7. REAM THE 3 1/16" HOLE IN THE PILE FOR THE A449 SHEAR ROD. COAT ALL CUT SURFACES WITH WASSER MC TAR, OR AN ENGINEER-APPROVED EQUIVALENT, AND INSTALL THE SHEAR ROD.
8. LIBERALLY FIELD COAT ALL STEEL AND HARDWARE IN THE LOWER COLLAR ASSEMBLY WITH WASSER MC TAR, OR AN ENGINEER-APPROVED EQUIVALENT.
9. PROCEED WITH INSTALLATION OF THE NEW CONCRETE LOW DECK BEAM AND WALL.
10. GROUT THE 3"ø PVC SLEEVES AND, ONCE THE LOW DECK AND WALL HAVE REACHED THEIR DESIGN STRENGTHS, PROCEED WITH BACKFILLING AND THE INSTALLATION OF THE CONCRETE HIGH DECK.

* THE CONTRACTOR MAY SUBMIT AN ALTERNATE PROCEDURE FOR APPROVAL.

REV.	DESCRIPTION	BY	DATE
1	ISSUED FOR BID	MGW	09/01/16

PRPA
PHILADELPHIA,PA

PIER 84 SOUTH

SECTION THRU UPRIVER SEAWALL

URBAN ENGINEERS, INC.
PORTS & WATERWAYS DIVISION
530 WALNUT STREET
PHILADELPHIA, PA. 19106-3685
PHONE (215) 922-8080 FAX (215) 922-8082

DESIGNED BY: MGW/PB
APPROVED BY: MGW
DRAWN BY: VKW/PB
PROJECT NO: 16-126.1

DATE: 11/19/10

SHEET 36 OF 38

S-17

SEAL
COMMONWEALTH OF PENNSYLVANIA
REGISTERED PROFESSIONAL ENGINEER
Michael G. Wagner
No. PE071324

BY:
DATE:

T:\PROJECTS\On-Going\2006 Projects\601300 PRPA Pier 84S Rehab\Work - 2010\Drawings\FINAL\S-17 SECTION THRU UPRIVER SEAWALL.dwg

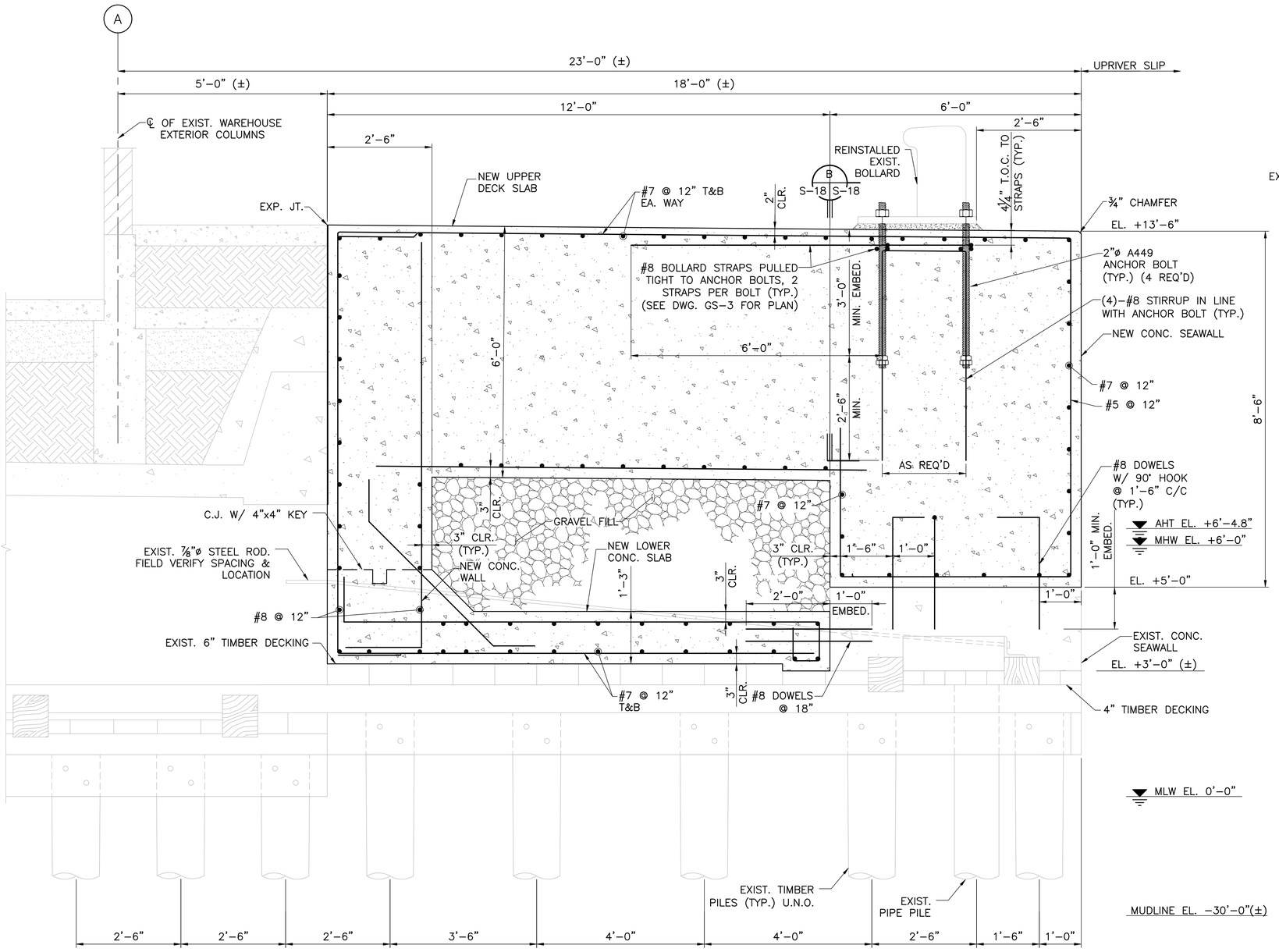

A SECTION
P-3,S-3,S-6 S-18 SCALE: 3/4" = 1'-0"

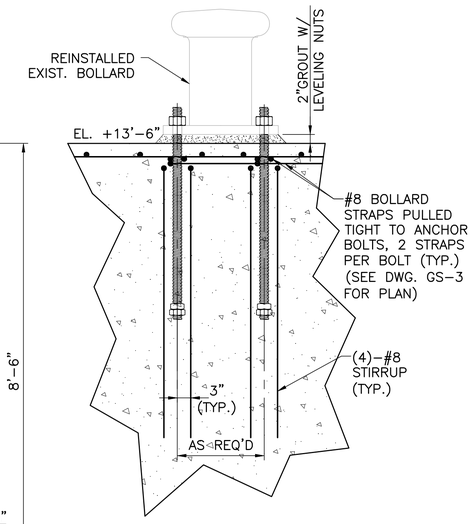

B SECTION
S-18 S-18 SCALE: 3/4" = 1'-0"

LEGEND:

EXISTING

NEW

ISSUED FOR BID
DATE: 09/01/16

NOTES:

1. FOR GENERAL NOTES, SEE DWGS. GN-1 & GN-2.
2. ATTRIBUTES OF THE EXISTING STRUCTURE, INCLUDING DIMENSIONS, HAVE BEEN OBTAINED FROM HISTORICAL DRAWINGS. SITE CONDITIONS MAY VARY. THE CONTRACTOR SHALL FIELD VERIFY ALL DIMENSIONS AND ELEVATIONS PRIOR TO PROCUREMENT OF MATERIAL. THE CONTRACTOR SHALL NOT BE PAID ADDITIONAL COST FOR VARIATIONS.
3. THE REUSED BOLLARD SHALL BE EXTRACTED WITH CARE DURING DEMOLITION, AND REPAINTED IN ACCORDANCE WITH SECTION 09900 OF THE TECHNICAL SPECIFICATIONS.
4. FOR BOLLARD STRAP REINFORCEMENT PLAN, SEE DWG. GS-3.

REV.	DESCRIPTION	BY	DATE
1	ISSUED FOR BID	MGW	09/01/16

PHILADELPHIA,PA
PIER 84 SOUTH
PRPA
SECTION THRU UPRIVER SEAWALL AT BOLLARD

URBAN ENGINEERS, INC.
PORTS & WATERWAYS DIVISION
530 WALNUT STREET
PHILADELPHIA, PA. 19106-3685
PHONE (215) 922-8080 FAX (215) 922-8082

DRAWN BY: VKW/PB
DESIGNED BY: MGW/PB
PROJECT NO: 16-126.1
APPROVED BY: MGW

DATE: 11/19/10

SHEET 37 OF 38

S-18

SEAL
COMMONWEALTH OF PENNSYLVANIA
REGISTERED PROFESSIONAL ENGINEER
Michael G. Wagner
No. PE071324

BY:
DATE:

T:\PROJECTS\On-Going\2006 Projects\601300 PRPA Pier 84S Rehab\Work - 2010\Drawings\FINAL\S-17 SECTION THRU UPRIVER SEAWALL.dwg

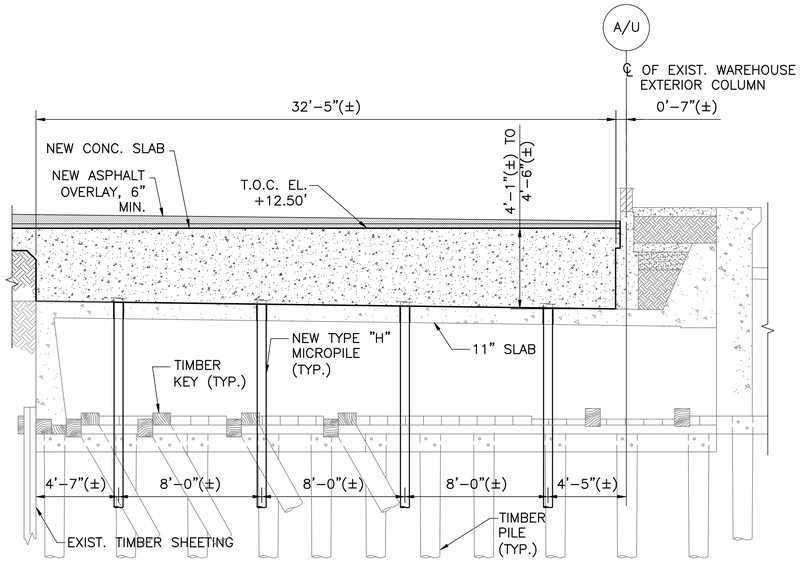

A SECTION

P-1, P-3, S-1, S-3, S-4, S-6 S-19 SCALE: 1" = 4'-0"

UPRIVER SIDE SHOWN.
DOWNRIVER SIDE SIMILAR.

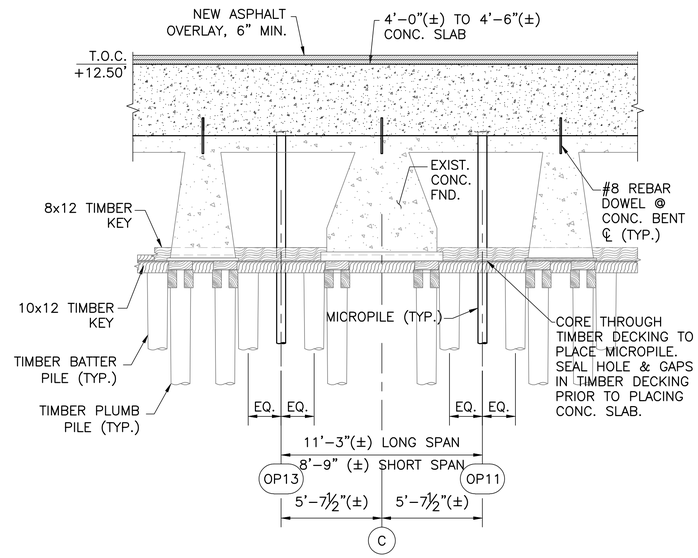

C SECTION

P-1, P-3, S-1, S-3, S-4, S-6 S-19 SCALE: 1" = 4'-0"

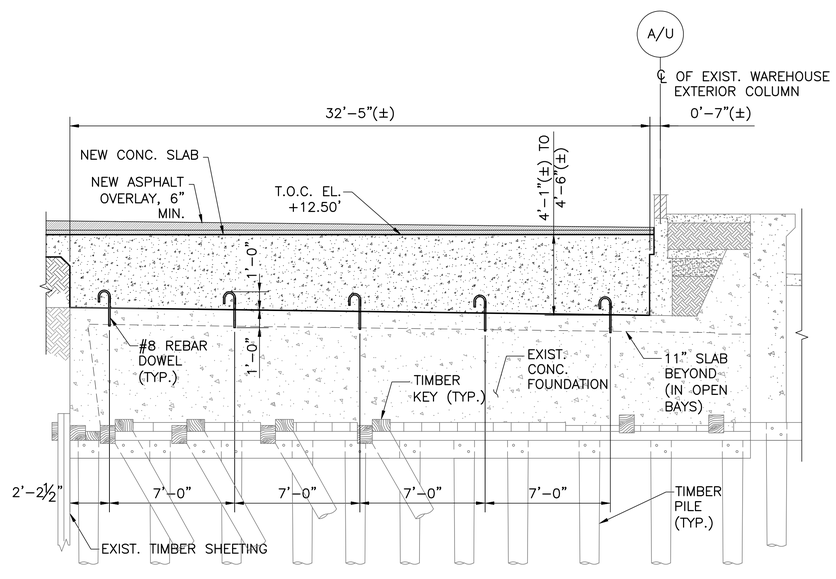

B SECTION

P-1, P-3, S-1, S-3, S-4, S-6 S-19 SCALE: 1" = 4'-0"

UPRIVER SIDE SHOWN.
DOWNRIVER SIDE SIMILAR.

ISSUED FOR BID
DATE: 09/01/16

LEGEND:

- (X) BUILDING COLUMN/ROW NUMBER
- (P#) NEW INTERIOR PILE COLUMN/ROW NUMBER
- (OP#) NEW IOUTSHORE PILE COLUMN/ROW NUMBER
- EXISTING
- NEW

NOTES:

1. FOR GENERAL NOTES, SEE DWGS. GN-1 & GN-2.
2. NOTE THAT FILL BELOW THE PROPOSED UPPER DECK SLAB INSIDE OF THE TIMBER SHEETING MAY HAVE SETTLED. THE CONTRACTOR MAY CHOOSE TO REPLACE FILL IN ORDER TO POUR THE NEW SLAB ON GRADE, OR TO PROVIDE STIFF, SELF-SUPPORTING FORMWORK TO REMAIN IN PLACE.

REV.	DESCRIPTION	BY	DATE
1	ISSUED FOR BID	MGW	09/01/16

PHILADELPHIA,PA
PRPA
PIER 84 SOUTH

PROPOSED SECTIONS OF NORTH & SOUTH INT. SLABS

URBAN ENGINEERS, INC.
PORTS & WATERWAYS DIVISION
530 WALNUT STREET
PHILADELPHIA, PA. 19106-3685
PHONE (215) 922-8080 FAX (215) 922-8082

DESIGNED BY: MGW/PB
DRAWN BY: VKW/PB
APPROVED BY: MGW
PROJECT NO: 16-126.1
DATE: 11/19/10
SHEET 38 OF 38

S-19

SEAL
COMMONWEALTH OF PENNSYLVANIA
REGISTERED PROFESSIONAL
Michael G. Wagner
ENGINEER
No. PE071324

BY: _____
DATE: _____

T:\PROJECTS\On-Going\2006 Projects\601300 PRPA Pier 84S Rehab\Work - 2010\Drawings\FINAL\S-19 PROPOSED SECTIONS OF NORTH & SOUTH INT. SLABS.dwg